CONF-8405113--4

DESIGN OF A TENSOR POLARIZED DEUTERIUM TARGET POLARIZED BY SPIN-EXCHANGE WITH OPTICALLY PUMPED NA

Michael C. Green
Argonne National Laboratory

CONF-8405113--4

DE85 000055

ABSTRACT

A proposed design for a tensor polarized deuterium target ($\sim 10^{15}$ atoms/cm^2) for nuclear physics studies in an electron storage ring accelerator is presented. The deuterium atoms undergo electron spin exchange with a highly polarized sodium vapor; this polarization is transferred to the deuterium nuclei via the hyperfine interaction. The deuterium nuclei obtain their tensor polarization through repeated electron spin exchange/hyperfine interactions. The sodium vapor polarization is maintained by standard optical pumping techniques. Model calculations are presented in detail leading to a discussion of the expected performance and the technical obstacles to be surmounted in the development of such a target.

OVERVIEW

Earlier in this conference, R. Holt has presented the physics motivation for reaction studies with tensor polarized deuterons with high energy electrons. Holt also discussed the technical feasibility of carrying out these reaction studies with an internal target in electron ring accelerator using electron spin exchange with an optically pumped Na vapor to tensor polarize deuterium nuclei.

Nearly all of the theoretical analyses used in target modeling was developed by M. Peshkin. In Peshkin's absence, I shall attempt to give an introduction and synopsis of the general theory. This discussion will be preceded by a general description of the basic physical components of a target system based on electron spin exchange. Numerical results and detailed design considerations will also be presented for a target operated in the molecular flow regime.

MASTER

DISTRIBUTION OF THIS DOCUMENT IS UNLIMITED

The submitted manuscript has been authored by a contractor of the U. S. Government under contract No. W-31-109-ENG-38. Accordingly, the U. S. Government retains a nonexclusive, royalty-free license to publish or reproduce the published form of this contribution, or allow others to do so, for

In more detail, a set of coupled rate equations is derived to describe the time evolution of the spin density of the deuterium nucleus (and its electron) undergoing spin exchange collisions with a polarized sodium vapor. These equations are solved to obtain the expected tensor polarization of the deuterium nucleus as a function of the average number of spin exchange collisions with a vapor of Na atoms of a given electron polarization. While this solution (referred to as the First In First Out model, FIFO) is of pedagogic interest, we find that it is not appropriate for describing the achievable deuterium polarization in the proposed target system under molecular flow conditions. However, by reinterpreting these equations as a description of the statistical ensemble of deuterium atoms flowing through the polarization cell, we are able to suitably modify the FIFO rate equations to contain the effect of deuterium flow as a depolarization mechanism. The average deuterium spin density is then identified as the equilibrium ($t \to \infty$) solution of these equations. This Equilibrium Flow (EF) model predicts a significantly lower target polarization than the FIFO model for a moderate number of spin exchange collisions. Deuterium depolarization due to cell wall collisions is easily accommodated in the EF model. We find a limit to the achievable tensor polarization of the deuterium target given by the polarization cell dimensions, Na density, Na-D spin exchange cross section (10^{-14} cm^2), and the deuterium wall depolarization probability. A polarization cell design is proposed which attempts to minimize the Na density and cell operating temperature (3×10^{12} atoms/cm^3 @ 232° C). This design yields a limiting tensor polarization, $t_{20} = 0.3$, when the wall depolarization probability is 10^{-3}.

The achievable deuterium flow rate and target thickness with this polarization are found to be strongly related to the maximum power of the laser light (used to optically pump or align the sodium vapor) which one can "put through" the Na into the D atoms. Using "low power" optical pumping rate equations in a model framework analogous to the EF model (ignoring high power density effects), we have roughly estimated that a target thickness of 2.3×10^{15} D atoms/cm^2 and a flow of 4×10^{17} D atoms/sec are attainable. The limiting tensor polarization, $t_{20} = 0.3$, can be achieved if one can optically pump a 1 cm thick Na vapor (density = 3×10^{12} atoms/cm^3) to a 95% electron polarization while putting ~650 mW of laser power (angular momentum transfer rate) through the Na vapor. This corresponds to an incident laser power of

~2 W (one pass through the cell) with complete frequency coverage of the Doppler broadened optical transition and a Na wall depolarization probability of 10^{-3}. We have ignored other depolarization mechanisms such as radiation trapping which might well be important at these high Na and laser power densities. Ignoring possible limits from Na optical pumping we believe our model remains valid up to target thicknesses of 8×10^{15} D atoms/cm^2. Thicker targets generally correspond to a shorter molecular mean free path such that molecular collisions begin to play a role and our basic assumption of molecular flow becomes invalid.

POLARIZATION CELL BASIC COMPONENTS AND PROCESSES

In this section the basic components of a system to produce a polarized deuterium target by optical pumping-spin exchange with a Na vapor are discussed; and the atomic and nuclear processes necessary for the production of nuclear polarization are reviewed.

The deuterium polarization process is best idealized as a somewhat ordered sequence of physical interactions at the atomic and nuclear level schematically represented in Fig. 1. The optically pumped Na vapor (electron polarized) transfers angular momentum to the deuterium atom ensemble (previously RF dissociated) via atomic electron spin exchange. In the absence of a strong magnetic field, the hyperfine interaction transfers some portion of this angular momentum to the nucleus. Meanwhile, the Na vapor polarization is replenished and a second spin exchange collision repolarizes the deuterium electron with hyperfine interactions polarizing the nucleus. After at least two spin exchange collisions, the deuterium nucleus ensemble has some degree of tensor (and vector) polarization. Repeated spin exchange/hyperfine interactions increase the tensor polarization of the ensemble to some limit determined by the degree of Na polarization.

Figure 2 shows the basic components of a spin exchange polarization system with a dissociator bottle feeding atomic deuterium into a spin exchange cell. A liquid Na pot is heated to maintain the desired Na density in the slightly hotter spin exchange cell (to prevent Na condensation on the cell walls). A set of Helmholtz coils (not shown) provide a weak magnetic field (5 Gauss) aligned along the polarization axis. Polarized deuterium (and some Na) flow out of the end spout which may be collected in an appropriate

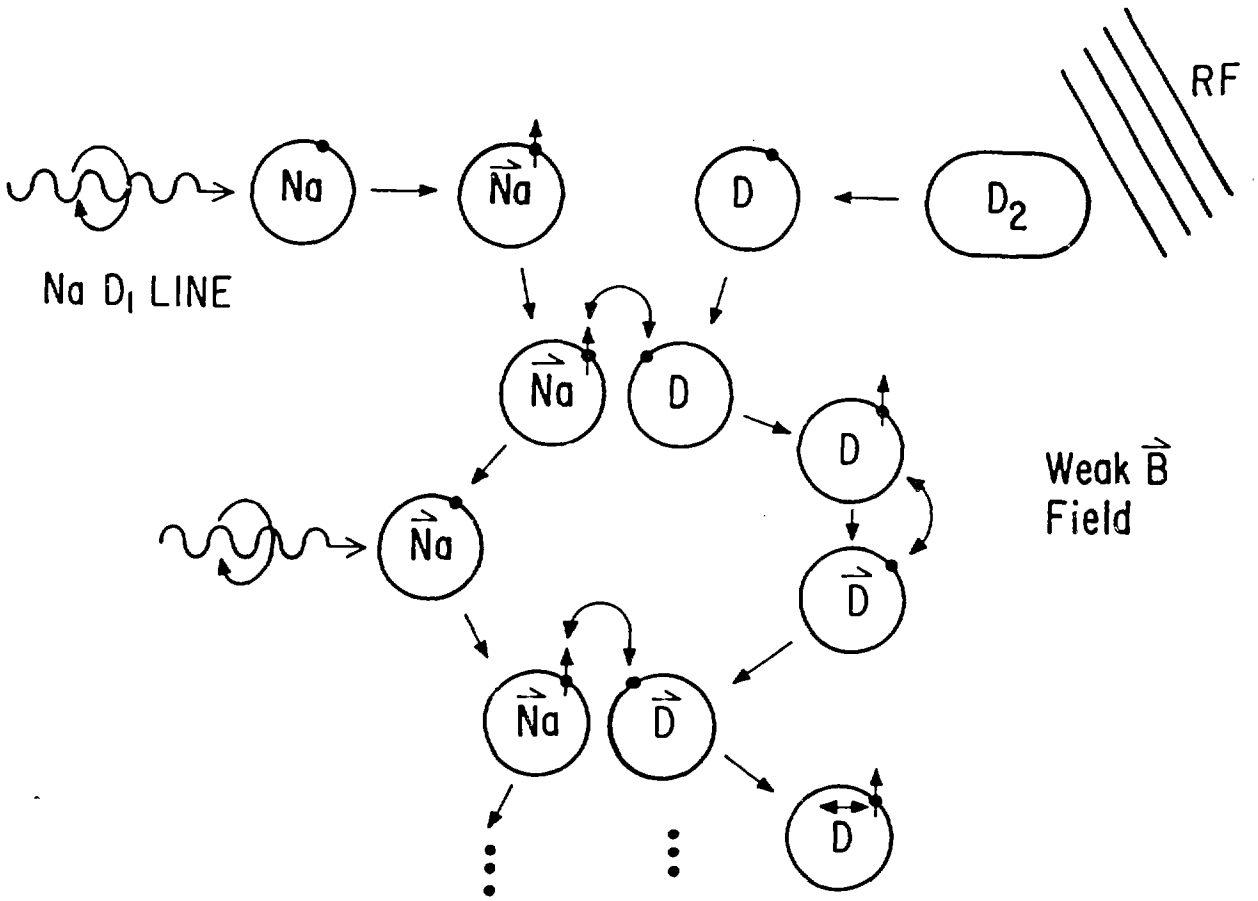

Figure 1: The deuterium tensor polarization process. Optically pumped Na and RF dissociated D_2 undergo repeated electron spin exchange/hyperfine interactions.

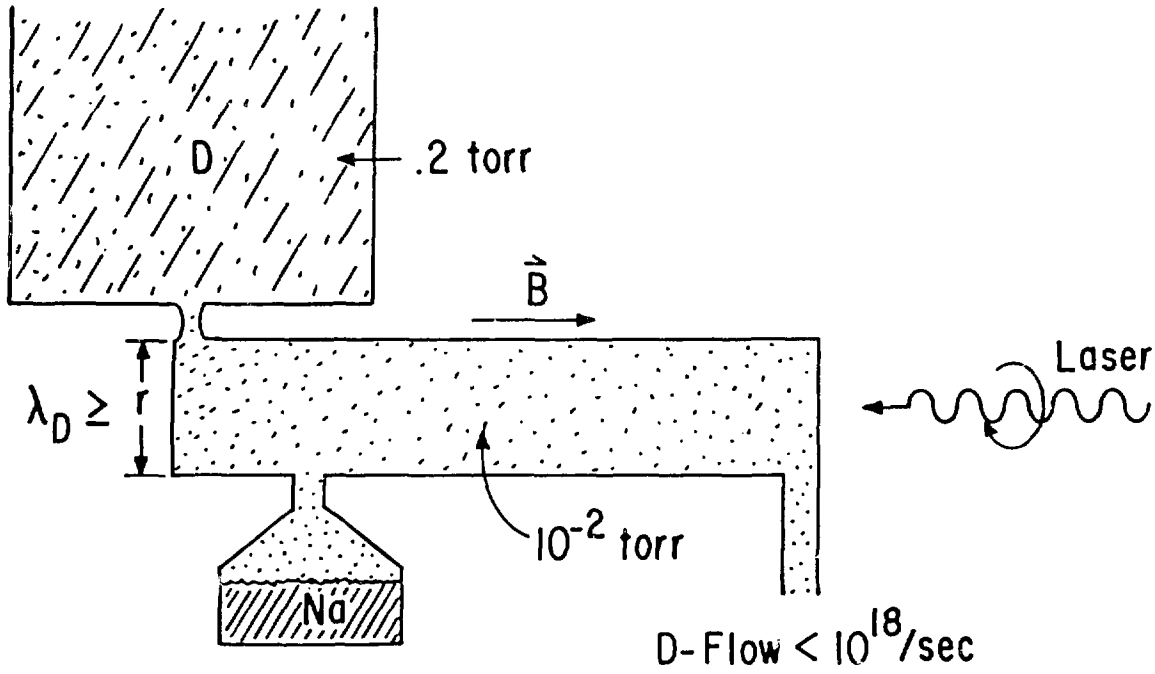

Figure 2: The basic components of a spin exchange polarization cell to produce tensor polarized deuterium.

containment cell or simply used as an atomic beam. The spout and cell dimensions (discussed later) are chosen so as to contain the deuterium and Na for a time sufficient to allow for the desired number of spin exchange collisions. This general design is based on the presumed limitation that the deuterium dissociation must take place outside of the polarizing region. We have also assumed that the deuterium emitted through the spout cannot be recycled back into spin exchange cell because it would most likely be recombined into D_2 nor dissociated again because of Na contamination. This technique of tensor polarizing deuterium is initially quite attractive because of its mechanical simplicity (no sextupole magnets or high-speed vacuum pumps) relative to conventional atomic beam sources. However, there are some forseeable technical obstacles in the development of such a target including high power density optical pumping, high efficiency dissociation, and cell wall coatings which sufficiently minimize both D recombination and depolarization.

The Na vapor in the spin exchange cell is spin polarized by a "standard" optical pumping technique. The cell is illuminated by circularly polarized Na D_1 light (5896 Å) (from a dye laser) which excites the $S_{1/2}$-$P_{1/2}$ electron transition in the Na atoms. The circularly polarized light in effect pumps angular momentum into the Na atom vapor by repeated excitation and spontaneous emission which eventually spin polarizes the outer unpaired electron of a Na atom as well as its nuclei via the hyperfine interaction. Although optical pumping of Na and other alkali vapors has been studied for many years[1-4], the efficient pumping of a relatively thick vapor, <u>without a buffer gas</u> as required for our application, is still mostly unexplored.[5]

The initial preparation of the deuterium is to break apart or dissociate the natural diatomic configuration of deuterium. The cross section for Na-D electron spin exchange is of the order of 10^{-14} cm^2 (100 Å^2) though for D_2 this cross section is about a factor of 10^{10} smaller. Since all atoms which come out of the dissociator also pass through the spin exchange cell and eventually contribute to the target thickness, a high dissociation <u>fraction</u> is a prerequisite to obtaining a high target polarization. We are currently pursuing the "standard" technique[6] of radio frequency (RF) dissociation in an appropriately tuned cavity. While this technique is well known, the dissociators of standard atomic beam sources are operated so as to give a high

current of atoms with the undissociated gas being pumped away after magnetic separation. However, it has been demonstrated that dissociation fractions of 95% are obtainable using RF dissociation.[6-7]

TENSOR NUCLEAR POLARIZATION BY ELECTRON SPIN EXCHANGE

In this section we will explain how one obtains tensor polarized deuterium by electron spin exchange. At first glance one might think this to be impossible since the spin exchange involves spin 1/2 particles and the deuterium nucleus is a spin 1 particle. However, in the absence of a strong magnetic field the nuclear spin and electron spin are coupled system by virtue of the hyperfine interaction. When a spin exchange occurs it momentarily decouples these spins due to the locally strong magnetic moments of the interacting electrons. This is another way of saying that in a spin exchange interaction the nucleus is a spectator.

A deuterium atom can be thought of as having a total spin F with a z-projection m or as a nucleus with spin I(=1) and projection m_I and an electron with spin J(=1/2) and projection m_J ($\vec{F} = \vec{I} + \vec{J}$, $m=m_I+m_J$). The (F,m) basis is appropriate for describing the time evolution of the deuterium atom in a weak magnetic field (see Fig. 3); i.e., states in this basis are energy eigenstates of the system. However, during the brief moment of a spin exchange interaction, the "appropriate basis" is the (m_I,m_J) basis change of m_J is possible. After a spin exchange interaction, the system in effect relaxes by means of the hyperfine interaction into other (m_I,m_J) states preserving only, F and m.

An unpolarized deuterium atom starts with all of the six possible spin states equally populated. For the sake of illustration, let us consider a deuterium atom in a particular (F,m) state, (F=3/2,m=-1/2) [see Fig. 4a] and trace the development of this system through a few spin exchange collisions with perfectly polarized Na atoms (with the z-projection of their electron spin always equal to +1/2). The black dots in the succession of diagrams in Fig. 4 indicate some probability for measuring the deuteriun atom in that particular state (-- diagonal elements of a probability density matrix). We see that the initial state shown in Fig. 4a is a pure state in the (F,m) basis but in the (m_I,m_J) basis this state vector has two components. The relative size of these two dots is not significant. (From simple angular momentum

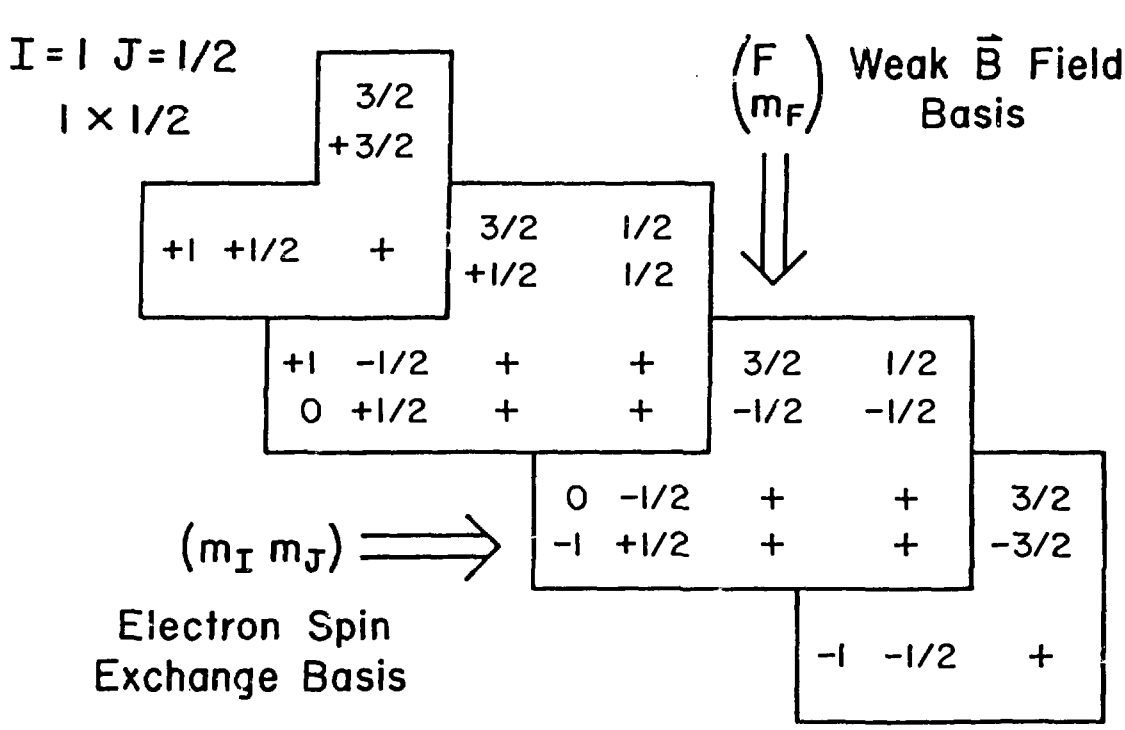

Figure 3: The spin exchange/hyperfine interaction basis states.

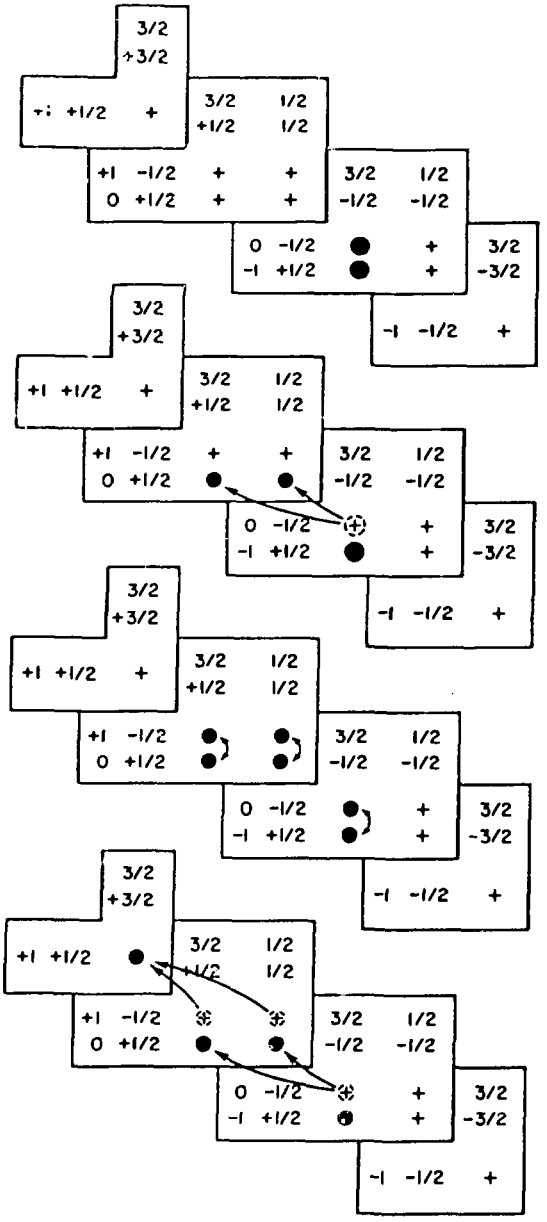

Figure 4: The chain of events in the process of spin exchange/hyperfine interactions with perfectly polarized Na vapor for a particular initial state of a deuterium atom. a) initial state of a particular deuterium atom b) state at the moment after electron spin exchange c) after hyperfine relaxation d) at the moment after another spin exchange. Notice (m_I=+1,m_J=+1/2) state component cannot relax via hyperfine interaction; therefore repetition of steps b) and c) build up the population of this component.

coupling one expects the ratio of the state populations, $(m_I=0,m_J=-1/2)/(m_I=-1,m_J=+1/2) = 2)$. Figure 4b shows the result of spin exchange interaction with our perfectly polarized Na. Here, the fraction of the initial state population with $m_J=-1/2$ is changed to a component with $m_J=+1/2$ leaving the nuclear spin projection, $m_I=0$, at its original value. Notice that both the $F=3/2$ and $F=1/2$ receive a portion of the population by the spin exchange process which does not preserve F. Immediately, following the spin exchange (Fig. 4c), the hyperfine interaction redistributes the state population into the $(m_I=+1,m_J=-1/2)$ as well as the $(m_I=0,m_J=-1/2)$ components. Figure 4d shows the state population following an additional spin exchange interaction where there is some probability of finding the deuterium atom in the $(m_I=+1,m_J=+1/2)$ state. It should be clear that as the number of spin exchange interactions increase so does the population of this state component (if there are no depolarizing processes occurring). The tensor polarization of a deuterium nucleus, t_{20} for a state population, ρ_{m_I} is

$$t_{20} = [3(\rho_{-1}+\rho_{+1})-2]/\sqrt{2}. \tag{1}$$

Therefore, tensor polarization of our deuterium nucleus also increases as the number of spin exchange interactions such that $\rho_{-1} \to 0$ and $\rho_{+1} \to 1$ and $t_{20} \to 1/\sqrt{2}$. A vector polarization is also acquired by the deuterium nucleus since the ρ_{-1} and ρ_{+1} state populations are unequal. From this specific example it should also be evident that a completely unpolarized deuterium nucleus also acquires some degree of both vector and tensor polarization after a few electron spin exchange collisions. As the reader may noticed, we have implicitly assumed that the spin exchange collisions occur at a rate much slower than the hyperfine mixing time. This assumption is valid for the systems we will consider; where spin exchange collisions occur about once every 10^{-4} sec as compared to the hyperfine mixing time of 10^{-9} sec.

FIRST IN FIRST OUT MODEL

In this section, the basic rate equation used for computing the population density of deuterium nuclear spin states is derived for an arbitrary electron spin polarization of the Na vapor. Generalizing the specific example of the previous section for the six possible spin states deuterium, we shall represent the deuterium atom population density by a six

element column vector, ρ. (These six elements are the diagonal elements of the density matrix in a quantum mechanical description of the system. We shall ignore the off-diagonal elements of this matrix which is equivalent to assuming there is no phase coherence between consecutive spin exchange/hyperfine interactions. For systems of gases having completely random interactions, this assumption seems well justified.[8]) The spin exchange and hyperfine mixing processes are identified as six by six matrices, N and L, which act upon ρ at a given rate, r. The rate, r, is simply the spin exchange rate with the proviso that each spin exchange is followed by a hyperfine interaction which "completely" mixes the electron and nuclear spin for a given (F,m) prior to the next spin exchange collision.

The deuterium population density vector, $\rho(t+\Delta t)$, is given in terms of $\rho(t)$ by the following matrix difference equation:

$$\rho(t+\Delta t) = (1-r\Delta t)\rho(t) + (r\Delta t)LN\rho(t). \tag{2}$$

The product, $r\Delta t$ gives the probability of a spin exchange reaction in a time Δt. Thus, given a spin exchange collision the matrix product LN acts on ρ. If a spin exchange does not occur, given by the probability $(1-r\Delta t)$, then ρ is unaffected. Using the spin exchange basis (m_i,m_j), let the elements of ρ, ρ_k be identified with deuterium state populations in the following manner:

$$\begin{matrix}\rho_1\\ \rho_2\\ \rho_3\\ \rho_4\\ \rho_5\\ \rho_6\end{matrix} \rightarrow \begin{cases}(\ 1,\ 1/2)\\ (\ 1,-1/2)\\ (\ 0,\ 1/2)\\ (\ 0,-1/2)\\ (-1,\ 1/2)\\ (-1,-1/2)\end{cases} ; \tag{3}$$

then it can be shown[9] that the L and N matrices are,

$$L = \begin{bmatrix} 1 & 0 & 0 & 0 & 0 & 0\\ 0 & 5/9 & 4/9 & 0 & 0 & 0\\ 0 & 4/9 & 5/9 & 0 & 0 & 0\\ 0 & 0 & 0 & 5/9 & 4/9 & 0\\ 0 & 0 & 0 & 4/9 & 5/9 & 0\\ 0 & 0 & 0 & 0 & 0 & 1 \end{bmatrix}, \qquad N = \begin{bmatrix} q & q & 0 & 0 & 0 & 0\\ 1-q & 1-q & 0 & 0 & 0 & 0\\ 0 & 0 & q & q & 0 & 0\\ 0 & 0 & 1-q & 1-q & 0 & 0\\ 0 & 0 & 0 & 0 & q & q\\ 0 & 0 & 0 & 0 & 1-q & 1-q \end{bmatrix}, \tag{4}$$

where q is the probability that given a spin exchange interaction the Na electron has a spin z-projection of +1/2. Taking the limit $\Delta t \to 0$, Eq. 2 becomes the differential equation,

$$\dot{\rho} = r(LN-1)\rho, \tag{5}$$

having the formal solution,

$$\rho(t) = e^{(LN-1)X}\rho_0. \tag{6}$$

where X ($\equiv rt$) is the average number of spin exchange collisions after a time t; and ρ_0 is the t=0 boundary condition which we will take as a completely unpolarized system; thus, $(\rho_0)_k=1/6$ for k=1-6.

Eq. 6 is the solution to the problem represented in Fig. 5. At time, t 0 (X=0), a deuterium atom enters a polarized Na vapor after some finite time interval this atom will have undergone (on the average) a certain number spin exchange collisions; what is its spin state population density? As indicated in Fig. 5, since the absolute location of the atom is uncertain, one must imagine some external means of tracking the atom of interest and then performing the spin state measurement at the time of interest. For a series of atoms entering the Na vapor, this model requires that we always measure the atoms in the sequence that they entered, namely, First In First Out (FIFO). Figure 6 shows the average tensor and vector polarization of the deuterium versus X for the FIFO problem computed[9] from Eqs. 1 and 5 for various sodium polarizations, $P_{Na} = 2q-1$. We see that after 5 spin exchange collisions, the tensor polarization has nearly reached its maximum value for a particular sodium polarization.

EQUILIBRIUM FLOW

While the FIFO model is invaluable as pedagogic exercise, we shall show that it does not adequately predict the performance of a "flow-through" polarization cell depicted in Fig. 2 under the conditions of molecular flow. Ultimately, we would like to predict the average tensor polarization of the deuterium atoms which emerge at the end of spin exchange cell spout. Upon restricting the pressure and temperature of the deuterium gas in the cell such

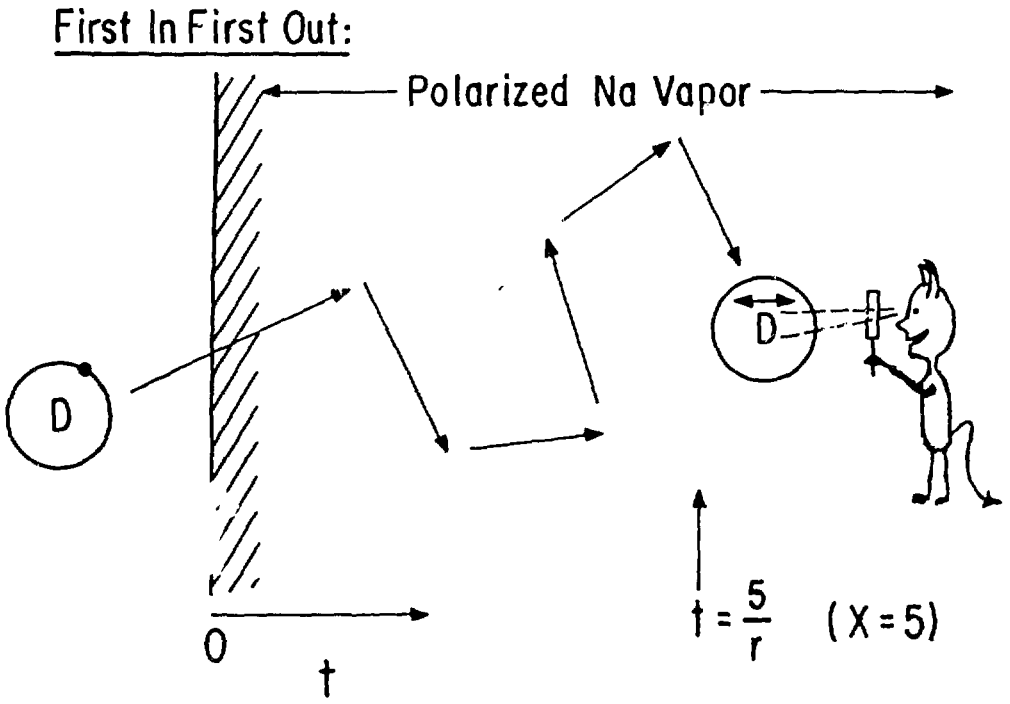

Figure 5: The problem solved by the FIFO model including a qualified measurement technician.

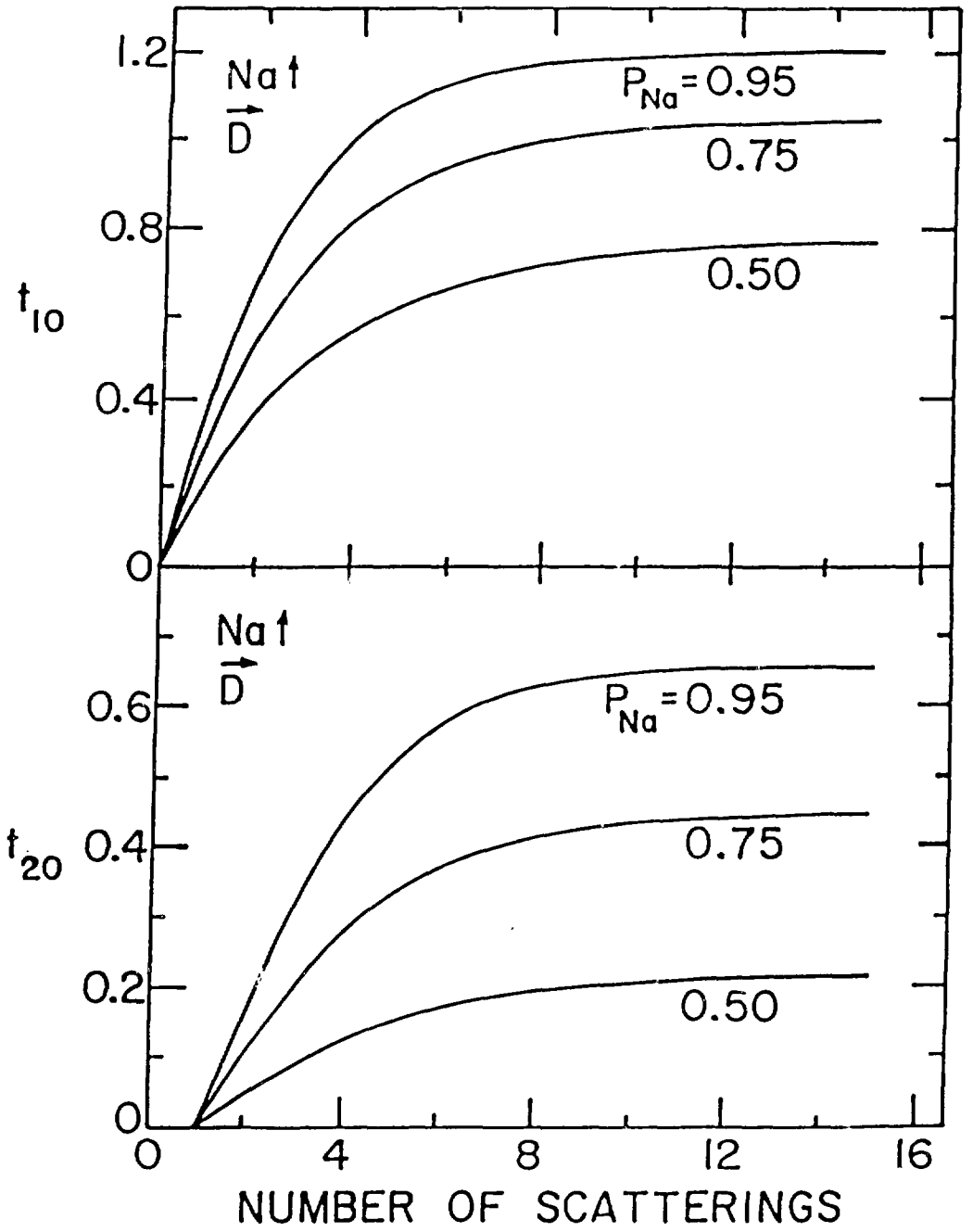

Figure 6: The deuterium nuclear polarization, t_{10} and tensor polarization, t_{20} versus the number of spin exchange scatterings for various Na vapor polarizations in the FIFO model.

that the mean free path for atomic collisions is greater than the linear dimensions of the cell, the motion of the D atoms is dominated by collisions with the cell walls (referred to as molecular flow). Those atoms which do emerge from the cell spout have been effectively randomized such that there is very little correlation between when a particular atom enters the cell and when it leaves through the spout. We shall assume there is no correlation; such that the spout serves to, in effect, sample the average polarization of the deuterium in the cell.

For a steady flow of atoms through the cell, every D atom lost through the spout is replaced by an unpolarized D atom from the dissociator. In its effect on the steady-state spin population in the cell, this flow is simply a closed loop process where atoms are depolarized at some fixed rate (see Fig. 7). This effect is easily included in a model if we reinterpret the population density vector, ρ, from the FIFO model as representing the spin population of <u>all</u> atoms inside the spin exchange cell. The depolarizing process of deuterium flow becomes just another "interaction" which adds an unpolarized state population, ρ_0 at a rate of $(1/T_c)$; where T_c is the average time a D atom spends in the cell. From the Equilibrium Flow (EF) viewpoint, Eq. 2 becomes

$$\rho(t+\Delta t) = (1-r\Delta t - \Delta t/T_c)\rho(t) + (r\Delta t)LN\rho(t) + (\Delta t/T_c)\rho_0; \qquad (7)$$

which becomes the differential equation,

$$\dot{\rho} = r(LN-1-1/rT_c)\rho + \rho_0/T_c \qquad (8)$$

We are interested in the solution of Eq. 8 in the limit $t \to \infty$ where polarization of the deuterium has reached a steady-state. Again taking the boundary condition that at $t=0$, $\rho=\rho_0$, it can be shown that

$$\underset{t \to \infty.}{\rho} = \rho_{eq} = [-rT_c(LN-1-1/rT_c)]^{-1}\rho_0. \qquad (9)$$

Remembering that r is the number of spin exchange collisions per D atom per sec, we recognize that $rT_c=X$. In the EF model, X is the average number of spin exchange collisions a D atom makes before escaping from the cell. The

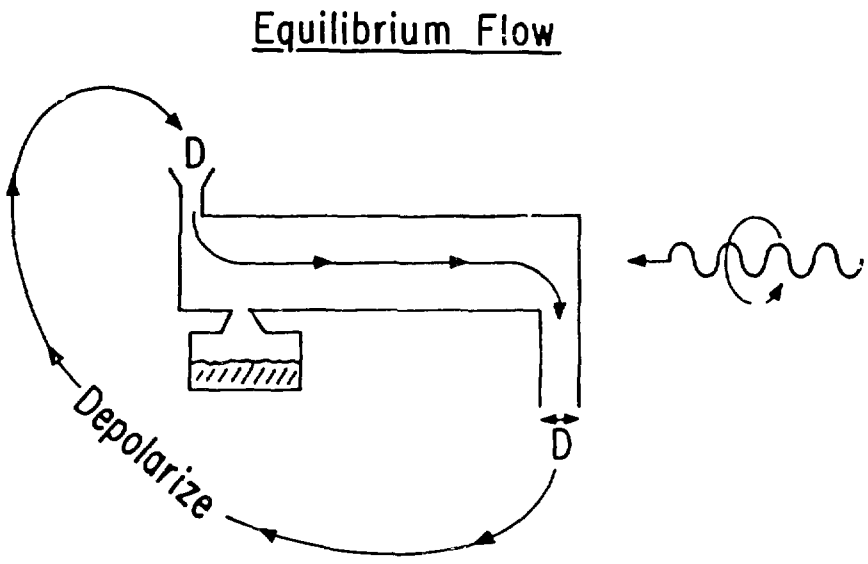

Figure 7: Equilibrium Flow (EF) model makes the deuterium flow through the cell just a depolarizing process.

definition of X in both the EF and FIFO models are quite similar and provide a common basis for comparison as shown Fig. 8. While the FIFO model exponentially approaches the limiting polarization as X gets large, the EF model approaches the same limit but much more slowly. Indeed, for X=5, the FIFO model gives a t_{20}=0.5 where the EF model has a t_{20}=0.3. The lack of dependence of the spin population on location of the spout relative to the cell entrance serves as a reminder that the deuterium polarization predicted by the EF model is the average polarization inside the cell. Indeed, the FIFO prediction gives a upper limit to a possibly higher polarization for atoms emerging from the spout due to a polarization gradient from the cell input to output spout. However, in the cell design discussed later, the Na-D spin exchange collisions are a factor of 100 below the number of wall collisions which should serve to eliminate polarization gradients.

EQUILIBRIUM FLOW WITH CELL WALL DEPOLARIZATION

So far we have shown, that the deuterium spin state population expected from polarization cell operating under molecular flow conditions is given by the following expression:

$$\rho_{eq} = [-X(LN-1-1/X)]^{-1}\rho_0, \tag{10}$$

where X is the average number of spin exchange collisions a D atom makes before emerging from the polarization cell. Letting T_w be the average time between D-atom wall collisions, depolarization due to these collisions is easily accounted for by making the following replacement in Eq. 9:

$$1/T_c \rightarrow (1/T_c + D_p/T_w); \tag{11}$$

where D_p is the probability a given wall collision depolarizes the colliding D atom. Eq. 10 can then be rewritten as

$$\rho_{eq} = [-X_{eff}(LN-1-1/X_{eff})]^{-1}\rho_0, \tag{12}$$

where X_{eff} is the effective number of spin exchange collisions,

$$1/X_{eff} = (1 + D_pT_c/T_w)/X,$$

$$= (1 + D_pW)/X. \tag{13}$$

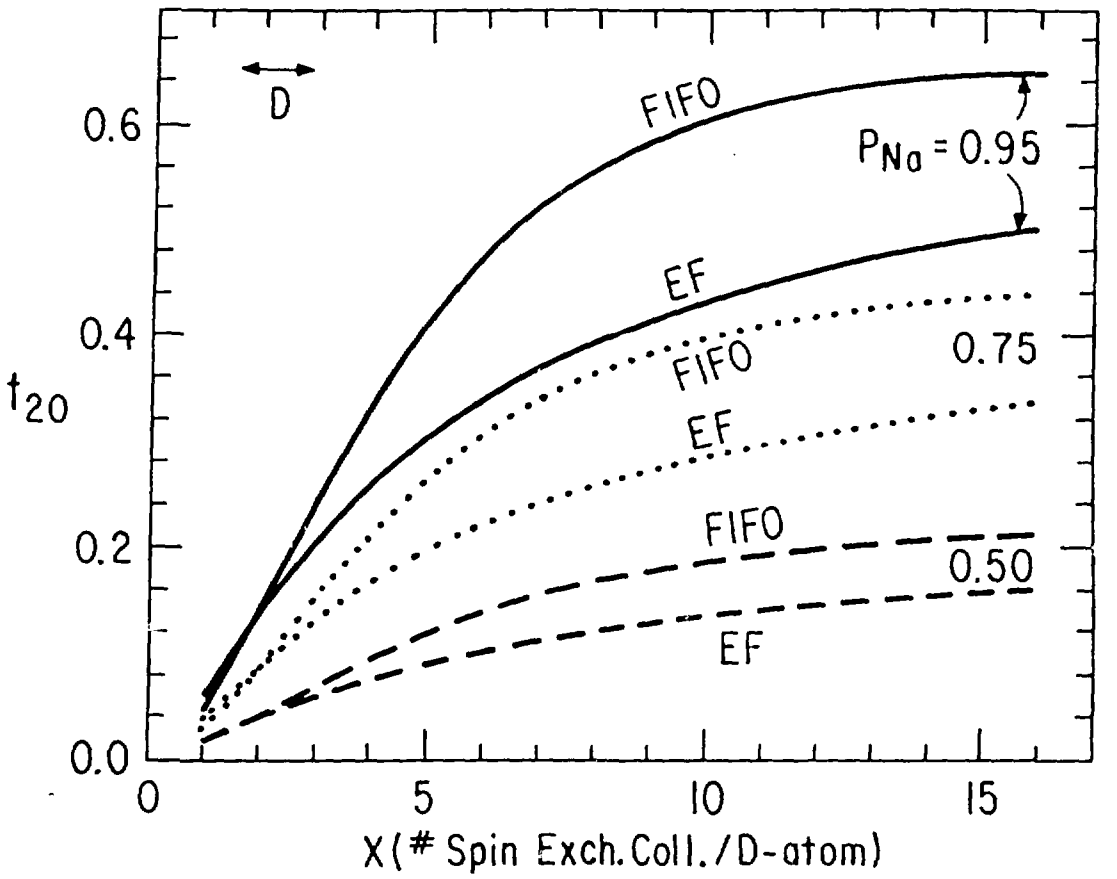

Figure 8: The deuterium nuclear tensor polarization, t_{20} versus the number of spin exchange collisions/ D atom, for the various Na polarizations as computed for the EF and FIFO models.

The parameter, $W=T_c/T_w$, is simply the number of wall collisions an atom makes before escaping from the spin exchange cell. Using X_{eff} in place of X, the EF model curves in Fig. 8 can be used to predict target performance when there are depolarizing wall collisions.

The depolarization probability, D, can be further broken down to include different depolarization rates for different regions inside the cell. In particular, we will consider collisions with the cell wall material to have a characteristic depolarization probability, D_w and assume that when D-atoms strike the entrance to the Na pot they always emerge from this region completely depolarized. Therefore, the depolarization probability can be written as,

$$D_p = (A_p/A_c + D_w(1-A_p/A_c), \tag{14}$$

where A_p and A_c are the Na pot entrance area and the spin exchange cell wall area.

THE CELL PERFORMANCE-DESIGN CONNECTION FOR DEUTERIUM

In the previous section we found that the effective number of spin exchange collisions a D-atom makes before leaving the polarization region, X_{eff} determines the extent of deuterium tensor polarization observed at the cell exit for a given Na vapor polarization. In this section we show that for a polarization cell operating in the molecular flow regime X_{eff} is independent of the deuterium flow rate. Indeed, X_{eff} is shown to be determined <u>only</u> by cell geometry, the Na-D electron spin exchange cross section (σ_{ex}), the material depolarization probability (D_w), and the Na vapor pressure (p_{Na}) at the chosen operating temperature (T). General expressions for X_{eff} are developed in terms of the cell configuration shown in Fig. 9. "Optimum" cell dimensions are selected and the limits to cell performance are discussed in the following section.

There are four regions in the polarization cell (Fig. 9) whose gas conductances come into play: the Na pot neck between the Na pot and the spin exchange cell (length, l_p and diameter, d_p), the spin exchange cell (l_c and d_c), the exit spout (l_s and d_s), and the dissociator neck between dissociator and spin exchange cell. To simplify our model calculations, a number of reasonable assumptions are made. These include 1) the dissociator bottle and

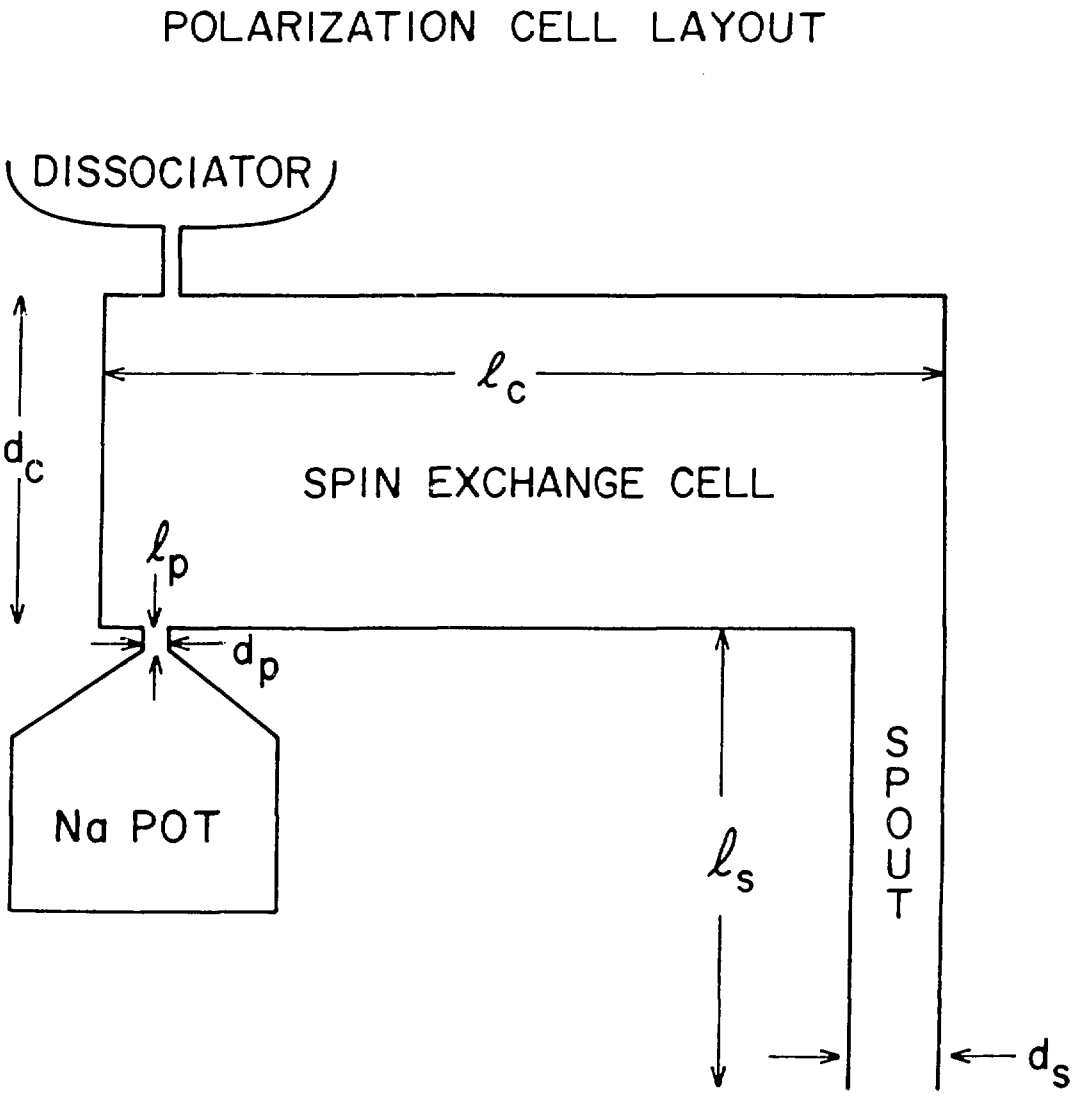

Figure 9: The basic polarization cell layout used for molecular flow calculations.

Na pot are large reservoirs whose conductances can be ignored, 2) both Na and deuterium atoms undergo molecular flow in the spin exchange cell and spout, and 3) backflow of Na and deuterium from the cell into the dissociator is negligible. This last assumption implies that the dissociator neck should be designed with a very small conductance as compared to that of the rest of the polarization cell. This necessarily leads to much higher deuterium gas pressure in dissociator than in the cell; and one would should expect the deuterium flow in the neck to be in the so called transition region[10] where atomic collisions cannot be ignored.

For convenience let us define the general tube conductance factor, C_α;

$$C_\alpha = d_\alpha^2/1.06(1+3l_\alpha/4d_\alpha) \tag{15}$$

where the subscript α can take on value of p, c, or s indicating a dependence on the Na pot neck, spin exchange cell, or spout dimensions, respectively.

The average Na density, n_{Na} in the spin exchange cell is related to the Na vapor pressure, the conductance of Na pot neck, and to a lesser extent, the conductances of the cell and spout. The Na vapor pressure, p_{Na} in Torr can be parameterized[11] as:

$$p_{Na}(T) = [10^{(9.235-5567/T)}]/T^{1/2}, \tag{16}$$

where T is the temperature in degrees K. Defining the total conductance factor from the Na pot through the spout as,

$$C_T = [\ 1/C_p + 1/C_s + 1/C_c\ ], \tag{17}$$

then the Na density in atoms/cm^3 can be shown to be,

$$n_{Na} = p_{na}(T)\ C_T[1/C_s) + 1/2C_c]\ 9.66 \times 10^{18}/T \tag{18}$$

In order to prevent the condensation of Na on the spin exchange cell and spout walls, the temperature of these regions must be kept slightly higher than that of the Na pot. Eq. 18 was derived from standard molecular flow formulas[10] for flow through coaxial tubes. The 90-degree bends between the

spin exchange cell and the Na pot neck or spout were ignored since the conditions, $d_c >> d_p$ and $d_c >> d_s$, are satisfied for the specific cell design considered later.

The average number of wall collisions an atom experiences before escaping a containment vessel, W, is given only by the cell geometry. For the general cell layout shown in Fig. 9,

$$W = 4A_c(1/C_s + 1/2C_c)]/\pi; \tag{19}$$

where A_c is the spin exchange cell wall area. The number of spin exchange collisions a D atom makes in the spin exchange cell can be shown to be directly related to W according the formula,

$$X = 4(1 + 2/23)^{1/2}V_c n_{Na}\sigma_{ex}W/A_c, \tag{20}$$

where V_c is the spin exchange cell volume. A conservative estimate of the Na-D spin exchange cross section, σ_{ex} is 5×10^{-15} cm^2 which comes from measurements of similar atomic reactions.[12] Substituting this result into Eq. 13 from the previous section,

$$X_{eff} = 4(1 + 2/23)^{1/2}V_c n_{Na}\sigma_{ex}W/A_c(1+D_pW), \tag{21}$$

for completeness we rewrite Eq. 14 as,

$$D_p = R + D_w(1-R), \quad R=A_p/A_c. \tag{22}$$

The above equations complete the connection between cell performance and design.

AN "OPTIMIZED" CELL DESIGN

Presented in this section are cell dimensions "optimized" so as to minimize depolarizing wall collisions yet still contain the D atoms for a time period long enough to allow for sufficient spin exchange collisions, X_{eff}. Initially, from Eq. 21, one might expect to accomplish this goal by diminishing the number of wall collisions, W, while increasing the Na density

to maintain X_{eff}. However, increasing the Na density independent of W requires increasing the cell operating temperature. Generally, cell wall coatings become less effective at higher temperatures resulting in the product, D_pW in the denominator becoming large, thus diminishing X_{eff}. In addition, the ability to maintain a Na polarization above 90% for higher Na densities (thicknesses) becomes limited by available laser power and other effects discussed later. As a cell design criterion, we chose to sacrifice half of spin exchange wall collisions to depolarization to keep both the Na density and cell temperature reasonably low; i.e, $X_{eff}=X/2$. This design restriction when substituted into Eq. 13 implies that

$$D_pW=1. \tag{23}$$

In order to directly relate D_p to the wall material depolarization probability, D_w; we require the polarization losses due to D-atoms colliding with the Na pot entrance to be equal to those with the cell wall; i.e, from Eq. 22

$$R/(1-R) = D_w. \tag{24}$$

Since $R \ll 1$,

$$D_p \sim 2D_w. \tag{25}$$

From studies of rubidium optical pumping with different wall coatings[13], one might hope that a cell wall coating can be developed for deuterium (and Na) to give $D_w=5 \times 10^{-4}$. Eq. 25 then implies $D_p=10^{-3}$ from which we conclude that the cell dimensions must allow for 1000 wall collisions (according to Eq. 23).

While a complete optimization has not been carried out, a set of cell dimensions has been found by a trial-and-error technique which gives 1000 wall collisions (Eq. 19), and for a Na density of 3.1×10^{12} atoms/cm^3, results in a $X_{eff}=5$ (Eq. 21). Following the notation of Fig. 9, these dimensions are

$$\begin{aligned} d_p &= 0.06 \text{ cm}, & l_p &= 0.06 \text{ cm}; \\ d_c &= 0.75 \text{ cm}, & l_c &= 2.06 \text{ cm}; \\ d_s &= 0.20 \text{ cm}; & l_s &= 1.00 \text{ cm}. \end{aligned} \tag{26}$$

The Na pot neck diameter (d_p = 0.6 mm) is constrained by Eq. 24, which requires $R = A_p/A_c \sim 5 \times 10^{-4}$. In order to keep the gas conductance of the Na pot neck low while maintaining some mechanical strength in the cell-pot connection, we have chosen the pot entrance tube length l_p = 0.6 mm also. Thus, according to Eq. 18, a Na pot temperature of 232° C gives the necessary Na density in the spin exchange cell. The spin exchange cell and spout should be kept at a temperature slightly higher than this to prevent Na condensation on the cell and spout walls. In spite of our attempts to minimize the temperature, attaining a wall material depolarization of 5×10^{-4} at cell temperatures in the range of 235° C would seem to be major technical obstacle. However, we know of no experimental depolarization studies in this temperature range.

With X_{eff}=5 and a Na polarization equal to 95%, the EF model predicts that the tensor polarization of the target is limited to $t_{20} < 0.3$ (from Fig. 8). Of course, the extent of the Na vapor polarization in an operational cell is determined by the rate at which depolarizing spin exchange collisions (and other losses) can be counteracted by the laser optical pumping process, which is the topic of the following sections.

A MATTER OF ENGLISH

The tensor polarization of the deuterium atoms as they pass through the spin exchange cell can be viewed as a transfer of angular momentum from circularly polarized photons through the Na vapor to the D atoms. We propose to name the rate at which this transfer occurs, "English", in analogy to the term used in the game of billiards or pool. The polarizing photon is analogous to a cue stick which sets the Na atom, the cue ball (an intermediary), into a spinning motion. The spin of the cue ball can then be used to "knock" the other billiard balls, D atoms, into the appropriate state. English, in the sense we wish to define it, is an angular momentum impulse transmitted through an intermediary. We also propose that the appropriate unit for English be watts or the units of power. A single photon can carry at most one $\hbar$ of angular momentum, and at given wavelength, a specific amount of energy; therefore, the angular momentum transfer rate can be identified with a photon or energy rate, or power.

We can roughly estimate the amount of English necessary to maintain a perfectly polarized vapor of Na atoms against spin exchange collisions with an unpolarized flow of D-atoms according to the following formula:

$$P_{Na-D} = (3/2)XF_D /(2.96 \times 10^{18}) \text{ watts,} \tag{27}$$

where X is the number of spin exchange collisions a D atom makes while flowing through the polarization cell at a rate, F_D in atoms/sec. At 589.6 Å (the optical pumping wavelength), 2.96×10^{18} photons carry a Joule of energy. The factor of 3/2 crudely accounts for the efficiency of the optical pumping process in Na (ignoring the nuclear spin). From Eq. 27 a deuterium flow of 4×10^{17} atoms/sec with X=10 requires an English of 2 watts. For molecular flow with the cell temperature and geometry discussed earlier, this flow corresponds to a density of the deuterium in the cell of 1.2×10^{15} atoms/cm^3.

EQUILIBRIUM FLOW OPTICAL PUMPING WITH NA-D ELECTRON SPIN EXCHANGE

For a better estimate of the required English and the polarization performance of the target system, we need to consider the optical pumping process in more detail including its coupling to deuterium polarization through electron spin exchange. We will develop a set of coupled rate equations for the Na spin state population density in a fashion quite analogous to those derived for the deuterium earlier. The source terms in these equations are the optical pumping transition probabilities taken from earlier work by Franzen and Emslie[2] and Raith[3] which are appropriate for low power optical pumping. By low power we mean that the stimulated emission is ignored, which may well be an incorrect assumption for the laser power densities required. However, we believe stimulated emission effects can only serve to increase the predicted performance of the target system.

Starting with the optical pumping source term let the Na population density vector be $\rho'(t)$, then a matrix difference equation can be written in fashion similar to the deuterium case as,

$$\rho'(t+\Delta t) = (1-\beta_0\alpha'\Delta t)\rho'(t) + (\beta_0\Delta t)B'\rho'(t). \tag{28}$$

The product, $\beta_0\Delta tB'$ gives the probability that a specific spin state is

populated in the optical pumping process reaction in a time Δt, where β_0 is the average photon absorption rate per Na atom for unpolarized optically thin Na vapor. The parameter B' is a matrix operator[2-5] describing the probability that a particular state is populated, given a photon absorption has occurred. The probability that a transition occurs into <u>some</u> state is given by $\alpha' = \sum_i B'_{ik}$. Thus the term, $(1-\beta_0\alpha'\Delta t)$ gives the probability that a photon absorption has not occurred. (The analogue of α' in the deuterium spin exchange expressions turns out to be equal to 1.) The elements of ρ' are state population probabilities in the (m_I, m_J) basis; namely,

$$\begin{matrix} \rho'_1 \\ \rho'_2 \\ \rho'_3 \\ \rho'_4 \\ \rho'_5 \\ \rho'_6 \\ \rho'_7 \\ \rho'_8 \end{matrix} \rightarrow \begin{cases} (3/2,\ 1/2) \\ (3/2,-1/2) \\ (1/2,\ 1/2) \\ (1/2,-1/2) \\ (-1/2,\ 1/2) \\ (-1/2,-1/2) \\ (-3/2,\ 1/2) \\ (-3/2,-3/2) \end{cases} . \tag{29}$$

From our experience with the deuterium system, we can immediately include the effects of electron spin exchange, Na flow, and wall depolarization. Let r' be Na-D spin exchange rate per Na atom, X'_{eff} be the effective number of Na-D electron spin exchange collisions per <u>Na atom</u>, and the matrices L' and N' be the hyperfine and spin exchange operators[9] analogous to those defined in the deuterium case; then Eq. 28 becomes:

$$\rho'(t+\Delta t) = [1 - (\beta_0\alpha' + r' + r'/X'_{eff})\Delta t]\rho'(t) + (\beta_0 B' + r'L'N')\Delta t\rho'(t) + (r'\Delta t/X_{eff})\rho'_0,$$

where

$$L' = \begin{bmatrix} 1 & 0 & 0 & 0 & 0 & 0 & 0 & 0 \\ 0 & 5/8 & 3/8 & 0 & 0 & 0 & 0 & 0 \\ 0 & 3/8 & 5/8 & 0 & 0 & 0 & 0 & 0 \\ 0 & 0 & 0 & 1/2 & 1/2 & 0 & 0 & 0 \\ 0 & 0 & 0 & 1/2 & 1/2 & 0 & 0 & 0 \\ 0 & 0 & 0 & 0 & 0 & 5/8 & 3/8 & 0 \\ 0 & 0 & 0 & 0 & 0 & 3/8 & 5/8 & 0 \\ 0 & 0 & 0 & 0 & 0 & 0 & 0 & 1 \end{bmatrix}$$

$$N' = \begin{bmatrix} Q & Q & 0 & 0 & 0 & 0 & 0 & 0 \\ 1-Q & 1-Q & 0 & 0 & 0 & 0 & 0 & 0 \\ 0 & 0 & Q & Q & 0 & 0 & 0 & 0 \\ 0 & 0 & 1-Q & 1-Q & 0 & 0 & 0 & 0 \\ 0 & 0 & 0 & 0 & Q & Q & 0 & 0 \\ 0 & 0 & 0 & 0 & 1-Q & 1-Q & 0 & 0 \\ 0 & 0 & 0 & 0 & 0 & 0 & Q & Q \\ 0 & 0 & 0 & 0 & 0 & 0 & 1-Q & 1-Q, \end{bmatrix} \tag{30}$$

where the parameter, Q is the probability that, given a spin exchange interaction, the deuterium electron has a spin z-projection of +1/2; and

$$1/X'_{eff} = (1+D'_p W)/X'. \tag{31}$$

W is the number of wall collisions an atom makes before exiting the cell, which is completely defined by cell geometry (Eq. 19) and in particular independent of atomic species (for molecular flow). X' is the number of electron spin exchange collisions a Na atom makes before exiting the cell. As in the deuterium case,

$$D'_p = R + D'_w(1-R); \tag{32}$$

where D'_w is wall material depolarization probability for Na. Generally, we will assume $D'_w = D_w$.

Taking the limit $\Delta t \to 0$, Eq. 30 becomes the differential equation,

$$\dot{\rho}' = \beta_0(B' - \alpha')\rho' + r'(L'N' - 1 - 1/X'_{eff})\rho' + (r'/X'_{eff})\rho'_0 \tag{33}$$

In the EF approach the Na state population of interest is the equilibrium solution of Eq. 33; i.e.,

$$\rho'(t) = \rho'_{eq} = [\ -X'_{eff}(\ Y[B'-\alpha'] + L'N' - 1 - 1/X'_{eff}\ )]^{-1}\rho'_0; \tag{34}$$
$$t \to \infty$$

where $Y = \beta_0/r'$. The Na spin state population given above is dependent on the deuterium electron polarization in the N'(Q) matrix computed from the D spin state population from Eq. 12. However, the Eq. 12 depends on the Na electron

polarization in the N(q) matrix which is computed from Eq. 34. These equations are therefore directly coupled in this manner. For completeness we give below the expressions for the D and Na spin electron spin probabilities, q and Q, in terms of the population densities:

$$q = \sum_{i=odd}^{7} (\rho'_{eq})_i \,, \qquad Q = \sum_{i=odd}^{5} (\rho_{eq})_i \,. \tag{35}$$

Eqs. 12, 34 and 35 form a set of coupled equations whose solution yields both the Na and D spin state populations which are mutually consistent given three parameters, X_{eff} for the deuterium equation, X'_{eff} and Y both for the Na equation.

THE CELL PERFORMANCE-DESIGN CONNECTION FOR Na

As a separate system, we have shown that the Na spin state population is determined by the degree of deuterium electron polarization and the parameters, Y and X'_{eff}. In this section, we present the connection between these parameters and -- the polarization cell geometry, deuterium flow rate, Na-D electron spin exchange cross section, the Na D_1 line photon absorption cross section, the Na vapor pressure at the cell operating temperature, the Na wall material depolarization probability, and the incident laser light power and bandwidth (assumed 100% circularly polarized). As in the case of the deuterium we will assume the general cell layout as shown in Fig. 9.

Starting with $X'_{eff} = X'/(1+D'_p W)$ (from Eq. 31), we can express X'_{eff} in terms of cell geometry, the D flow rate, the spin exchange cell temperature, and D'_w as,

$$X'_{eff} = 4(1+23/2)^{1/2} V_c n_D \sigma_{ex} W/A_c [1 + W(R + D'_w(1-R))], \tag{36}$$

where

$$n_D = F_D W/[3638 A_c (T/2)^{1/2}], \tag{37}$$

is the deuterium density in atoms/cm^3. The D flow rate is F_D in atoms/sec, and other parameters have been defined in previous sections.

The parameter, Y is the ratio of the average photon absorption rate per Na atom for an unpolarized vapor, β_0 to the Na-D electron spin exchange rate per Na atom, r'. Thus, Y measures the extent to which the laser light can replenish polarization losses due to spin exchanges. For molecular flow,

$$r' = 4.57\times10^4 n_D \sigma_{ex}[T(1/23+1/2)]^{1/2}/\pi. \tag{38}$$

The spectral intensity $I(z+\Delta z)$ along the z-axis of the cell is given according to the formula:

$$I(z+\Delta z)=I(z)-\beta(z)\beta_0 n_{Na}\Delta z/\Delta\nu \tag{39}$$

where $\beta(z)=tr(B'\rho(z)')/tr(B'\rho'_0)$ is the normalized photon absorption rate per Na atom for an arbitrary Na vapor spin population and $\Delta\nu$, the absorption bandwidth. Assuming full coverage of the doppler frequency absorption bandwidth by the incident light, β_0 is given in terms of the spectral intensity, I(z) as,

$$\beta_0=\pi c r_0 f I(z)=4.4\times10^{-3}I(z) \tag{40}$$

where c is the speed of light, r_0 is the classical radius of the electron, and f is the oscillator strength for the transition of interest. For an incident laser power, P_w in watts giving full doppler coverage over an area, $a_c = \pi d_c^2/4$

$$I(z=0)=P_w\lambda/(1.987 \times 10^{-15}\ a_c)\ [\text{photons}/(\text{sec-cm}^2\text{-H}_z)]\ , \tag{41}$$

where λ(=5896 Å) is the wavelength of the incident light in Å.

The Na density in the proposed cell design is far from optically thin for the incident light intensities anticipated (1-2 watts). Therefore, β_0 becomes dependent on z and thus to obtain the Na polarization, Eqs. 34 and 35 must be evaluated in discrete steps (Δz) from the front of the cell at the incident laser intensity to the back with the aid of Eqs. 39 and 40. Since the EF model assumes that the Na-D spin exchange collisions occur at random

locations in the cell, the Na electron polarization, q used in the D atom spin population calculation (Eq. 12) is taken as the average of the z-dependent Na electron polarizations computed, according to Eq. 35, in discrete steps.

CELL PERFORMANCE

In this section, the cell performance or the tensor polarization of the deuterium which emerges from the spout is discussed. The numerical solution of the coupled Na-D spin population equations for the earlier discussed cell design is presented as a function of the power of the incident laser light which is assumed to be perfectly matched to the doppler broadened absorption bandwidth of the Na vapor including the 1.7 GHz hyperfine splitting of the $S_{1/2}$ level (~4 GHz).

From our crude arguments on the required English in an earlier section, we shall chose a D flowrate of 4×10^{17} atoms/sec with an incident laser intensity of 2 watts (or 4.5 watts/cm^2). With this deuterium flowrate and the cell parameters given earlier we conclude that the deuterium density, $n_D = 1.1 \times 10^{15}$ atoms/cm^3 from Eq. 37, the effective number of Na-D spin exchange collisions per Na-atom, $X'_{eff} = 3 \times 10^3$ from Eq. 36, and the Na-D spin exchange rate, $r' = 1.3 \times 10^6$/(sec Na-atom) from Eq. 38. We estimate the maximum target thickness obtainable by an appropriate containment vessel at the end of the polarization cell spout from the thickness inside the spin exchange cell, $n_D l_c = 2.3 \times 10^{15}$atoms/cm^2.

The light absorption rate per Na atom for unpolarized Na, β_0, at the front of the cell (z=0) for a $\Delta\nu$=4 GHz bandwidth equals 1.5×10^7 photons absorbed/(sec Na-atom). Finally we find compute, $Y(z=0)=\beta_0(z=0)/r' = 10.8$.

Using a iterative computational technique, Eqs. 12, 34 and 35 have been solved for $Y(z=0)=10.8$, $X'_{eff}=3 \times 10^3$ and $X_{eff}=5$ yielding a deuterium tensor polarization of 0.28 with a Na electron polarization of 95% and 0.65 watts of laser power absorbed by the Na vapor in spin exchange cell. This absorbed power should be identified as English since it represents angular momentum put into the Na vapor which is lost in depolarizing wall collisions or Na flow or is transferred to the deuterium atoms. (Our crude English estimate from Eq. 27, based on absorption by an unpolarized vapor, turns out to be a reasonable assessment of the necessary incident laser power to achieve high target polarization.) Figure 10 shows the dependence of the

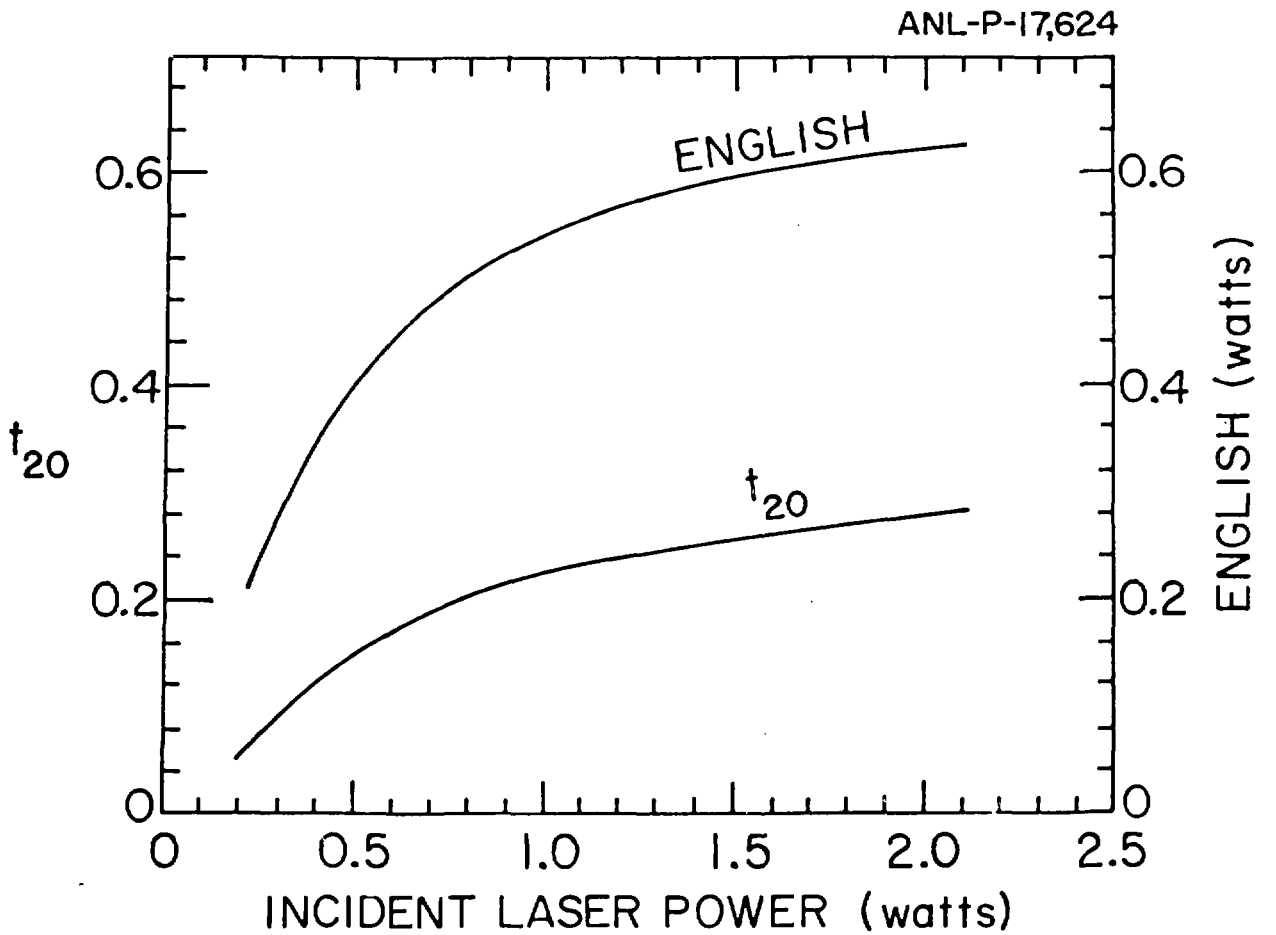

Figure 10: The expected target tensor polarization (scale on the left) and absorbed English (scale on the right) for the proposed cell dimensions, operating temperature, and other design parameters (giving a target thickness $\sim 10^{15}$ atoms/cm^2) versus incident laser power (see text).

English and the deuterium tensor polarization upon the incident laser power with all other cell design parameters held constant. From these curves we see that 1 watt of incident laser power produces an English = 0.57 watts, which makes more efficient use of laser power at the expense of t_{20}=0.22.

Deuterium recombination into D_2 and other chemical reactions which remove atomic deuterium from the flow out of dissociator have been ignored in the previous calculations. Clearly, a deuterium nucleus loses its tensor polarization in a weak magnetic field when recombination occurs. Also, deuterium molecules will not interact with the Na and D atoms under conditions of molecular flow; therefore, molecular deuterium from incomplete dissociation or recombination inside the spin exchange cell simply contributes a background of unpolarized deuterium which emerges from the spout and degrades the observed overall target polarization according to the formula,

$$t_{20} = [3(\rho_{-1}+\rho_{+1}+f(2/3-\rho_{-1}+\rho_{+1})-2]/\sqrt{2}, \qquad (42)$$

in the notation of Eq. 1, where f is the fraction of deuterium atoms in molecular form and $\rho_m i$ only describes the nuclear spin population of the deuterium in monoatomic form.

We have also ignored Na-Na and D-D spin exchange process in the previous calculations. The effect of such collisions has been discussed by Anderson et al.[14] When a large number of spin exchange collisions occur a spin-spin equilibrium is established such that the population density can be characterized by a single parameter, the spin temperature.

Since there are so few Na-D spin exchange collisions per atom in our cell, we do not expect that a single spin temperature would describe the combined Na and D populations. As for the Na population as separate system, Na-Na spin exchanges are 2 orders magnitude less frequent than Na-D spin exchanges, which is an order of magnitude less than the optical pumping rate (since Y=10.8); therefore, the Na spin state population is dominated by the optical pumping process when conditions of high Na polarization are maintained. However, for the deuterium population a spin-spin equilibrium is most likely achieved, since between every Na-D collision an average of 480 D-D spin exchanges occur. Using the FIFO model in discrete time steps, we have studied the effect of including D-D spin exchange collisions between Na-D spin

exchanges where the deuterium average electron spin polarization is recomputed after each step as input for the next D-D spin exchange. The results of this modeling show a 2% effect in t_{20} for 5 Na-D spin exchange collisions. Indeed, the effect of electron spin exchange followed by hyperfine mixing results in a deuterium population distribution quite close to that given by spin-spin equilibrium.

TECHNICAL OBSTACLES TO A WORKING TARGET

In order to produce a tensor polarized deuterium target with $t_{20} = 0.3$ and a thickness of 2.3×10^{15} atoms/cm^2 (with a D flow of 4×10^{17} atoms/sec), we require a laser with sufficient power and frequency coverage to optically pump a Na vapor at 235° C to 95% polarization while putting 650 mW of English through this vapor. Also, the polarization cell wall material must have a depolarization probability less than or equal to 5×10^{-4} and a recombination probability less than or equal to 10^{-4} at 235° C with the deuterium entering the cell being ~90% dissociated.

As for the laser requirements, we estimate a that 4.5 watts/cm^2 in a 4 GHz bandwidth would do the job with one pass through the spin exchange cell. It may be possible to lower the power requirement by reflecting the beam which emerges from the cell back into the cell. Also, one could use two lasers tuned at slight different frequencies to obtain the necessary frequency coverage and power. As mentioned earlier our estimates of the necessary laser power does not include stimulated emission effects which we believe can only serve to increase the vapor polarization. We have also ignored the depolarizing effects of "radiation trapping,"[15] which may place a practical limit to the Na density for a given polarization and English. High-power, high-English, and high-polarization -- optical pumping for the Na vapor density in our range of interest has yet to be demonstrated.[5]

Nearly independent of the necessary optical pumping technology is the requirement of low depolarization and recombination probabilities for the cell wall material. We know of no extensive studies of these properties for any materials in the temperature range interest (235° C). If the requirement of a low Z optical pumping vapor could be relaxed (originally necessary to prevent excessive bremsstalung losses in the stored electron beam, lifetimes ~10 hours), a different alkali vapor could be optically pumped giving the same

performance at lower temperatures. Indeed, we have calculated that the proposed polarization cell design could be operated at 125° C with a rubidium vapor and similar laser power requirements. This is close to the temperature where cell wall coatings have been developed for rubidium which give depolarization probabilities in the 10^{-4} range.[13]

ACKNOWLEDGMENTS

I wish to thank my collaborators who have contributed much toward the the polarized target project: D. Geesaman, L. Goodman, R. Kowalczyk, J. Napolitano, E. Ungricht, L. Young and B. Zeidman; in particular, R. Holt for guidance and for originating the spin-exchange target concept and M. Peshkin for laying the theoretical groundwork necessary for the development of the model results presented here.

REFERENCES

1. J. Brossel, A. Kastler, and J. Winter, J. Phys. Radium 13, 668 (1952).

2. W. Franzen and A. G. Emslie, Phys. Rev. 108, 1435 (1957).

3. W. Raith, Z. Physik 163, 467 (1961).

4. W. Happer, Rev. Mod. Phys. 44, 169 (1972).

5. During the preparation of this manuscript, a new paper was published documenting the optical pumping of Na Vapor having the thickness and density in the range we require. See E. W. Weber and H. Vogt, Phys. Lett. 103A, 327 (1984).

6. J. Slevin and W. Stirling, Rev. Sci. Instr. 52, 1780, (1981).

7. M. P. Maley et al, Bull. Am. Phys. Soc. 29, 665 (1984).

8. The rate equation we develop in this presentation is the "Pauli master equation" for further discussion of its range of validity see: W. Peier and A. Thellung Physica 46, 577 (1970); W. Peier Physica 57, 565 (1972); and, L. Van Hove, Physica 21, 517 (1955).

9. M. Peshkin, private communication.

10. Dushman S. and J. M. Lafferty, Scientific Foundations of Vacuum Technique, John Wiley & Sons, Inc., New York, 1969.

11. R. W. Ditchburn and J. C. Gilmour, Rev. Mod. Phys. 13, 310 (1941).

12. R. Franken, R. Sands, J. Hobart, Phys. Rev. Lett. 1, 53 (1964); and, L. W. Anderson and A. T. Ramsey, Phys. Rev. 132, 712 (1964). See also theoretical predictions: E. M. Purcell and G. B. Field, Astrophys. J. 124, 542 (1956); and, A. Dalgnaro and M. R. H. Rudge, Proc. Roy. Soc. London a286, 516 (1956).

13. M. A. Bouchait and J. Brossel, Phys. Rev. 147, 41 (1966).

14. L. W. Anderson, F. M. Pipkin, and J. C. Baird, Phys. Rev. 116 87 (1959); L. W. Anderson and A. T Ramsey, Phys. Rev. 132, 712 (1963).

15. T. Holstein, Phys. Rev. 72, 1212 (1947).