300
11-6-84 W.B. (1)

DR-0542-8

I-17866

ORNL/TM--9240

DE85 000183

ornl

OAK RIDGE NATIONAL LABORATORY

MARTIN MARIETTA

Direct Reading Fast Microwave Interferometer for EBT

T. Uckan

OPERATED BY
MARTIN MARIETTA ENERGY SYSTEMS, INC.
FOR THE UNITED STATES
DEPARTMENT OF ENERGY

DISTRIBUTION OF THIS DOCUMENT IS UNLIMITED

ORNL/TM-9240
Dist. Category UC-20 f, g

Fusion Energy Division

DIRECT READING FAST MICROWAVE INTERFEROMETER FOR EBT

T. Uckan

Date Published: October 1984

NOTICE This document contains information of a preliminary nature. It is subject to revision or correction and therefore does not represent a final report.

DISCLAIMER

This report was prepared as an account of work sponsored by an agency of the United States Government. Neither the United States Government nor any agency thereof, nor any of their employees, makes any warranty, express or implied, or assumes any legal liability or responsibility for the accuracy, completeness, or usefulness of any information, apparatus, product, or process disclosed, or represents that its use would not infringe privately owned rights. Reference herein to any specific commercial product, process, or service by trade name, trademark, manufacturer, or otherwise does not necessarily constitute or imply its endorsement, recommendation, or favoring by the United States Government or any agency thereof. The views and opinions of authors expressed herein do not necessarily state or reflect those of the United States Government or any agency thereof.

Prepared by the
OAK RIDGE NATIONAL LABORATORY
Oak Ridge, Tennessee 37831
operated by
MARTIN MARIETTA ENERGY SYSTEMS, INC.
for the
U. S. DEPARTMENT OF ENERGY
under Contract No. DE-AC05-84OR21400

MASTER

DISTRIBUTION OF THIS DOCUMENT IS UNLIMITED

CONTENTS

	Page
ABSTRACT	1
I. INTRODUCTION	3
II. INTERFEROMETER DESIGN	3
III. PRINCIPLE OF OPERATION	4
IV. PERFORMANCE	5
V. CONCLUSION	6
ACKNOWLEDGMENTS	7
REFERENCES	8

I. INTRODUCTION

Recent pulse experiments on the ELMO Bumpy Torus (EBT) fusion device,[1] which normally runs steady state with electron cyclotron heating, necessitated the measurement of plasma density n (~few × 10^{12} cm^{-3}) and its time evolution. To do this, a direct reading fast 4-mm microwave interferometer has been developed and installed on the device. The system is capable of responding to the change of density within 100 μs, which is faster than a typical confinement time for the electrons on the order of 1 ms.[1] The interferometer described here does not utilize the standard method of fringe counting[2] due to phase shift changes in the probing microwave beam with plasma. Instead, the phase shift changes are continuously measured and displayed with the help of a servo-control fast ferrite phase shifter (FPS), which keeps the interferometer arms nulled. The FPS (a TRG series) is the main component of the system that takes about 20 μs to switch from 0 to $\pi/2$ phase shift. This nonreciprocal microwave component can provide up to 2π phase shift increase to a signal passing through it.

II. INTERFEROMETER DESIGN

The basic elements of the interferometer are shown in Fig. 1. This interferometer operates at $\omega/2\pi$ = 70 GHz with a $\omega_m/2\pi$ = 50-kHz amplitude modulation excited by a pin diode. The microwave beam from a low-power (~100-mW), reflex klystron is divided after an isolator and the pin diode into two parts by a 10-dB directional coupler for plasma (P) and reference (R) arms of the system. The reference arm signal goes to a balanced mixer through an attenuator and a direct reading calibrated phase shifter (DRPS). The plasma arm, on the other hand, consists of a TRG series y-junction circulator (CIR), an attenuator, and a

remote control phase shifter. The microwave beam is injected vertically into an EBT cavity through a standard gain horn. Port 2 of the circulator (Fig. 1) has the FPS with a terminated end. The incoming signal from port 1 traverses the FPS twice before it comes out of port 3. Therefore, a circulator and FPS combination can provide twice the phase shift change to the beam that the FPS alone delivers. With this arrangement of CIR and FPS, the dynamic range of the system for phase shift measurements (and, in turn, density) can easily be extended by 4π (two fringes) for every FPS cascaded. The signal from the receiving horn is mixed with the reference signal in the balanced mixer. A pair of crystal diodes that are located at the summing and at the difference ports of the balanced mixer perform the usual square law detection[2] of the signal. With the help of the selective preamplifiers, each signal is then filtered and applied to the tuned (50-kHz) differential amplifier (DIFF). The DIFF has an output voltage[3] of $V_d \sim \cos\phi \cos\omega_m t$, where $\phi = \phi_R - \phi_P$ is the phase shift difference between the arms. Initially, before the measurement, the plasma and the reference arms are brought into quadrature with the remote control phase shifter so that V_d is zero. When this occurs, it is said that the system is null. With the method used, a null in V_d can be obtained that is independent of the relative signal amplitudes of the arms.

III. PRINCIPLE OF OPERATION

The phase sensitive detector (PSD) of this system performs an amplitude demodulation by means of a synchronous detection technique.[3] Therefore, the PSD used here basically consists of a multiplier and a low-pass filter.[4] The output signal of the PSD is proportional to the phase difference ϕ (i.e., $V_{PSD} \sim \cos\phi$), which has a nonzero value until the system reaches a null. Introducing plasma into the cavity causes a phase shift depletion $-\Delta\phi_P$ in the plasma arm since the refractive index of

the plasma is less than that of the vacuum. Having nulled the system (i.e., keeping the initial value of ϕ_p constant), again with the use of the FPS, the value of $\Delta\phi_p$ becomes known since $\Delta\phi_p = \Delta\phi_{FPS}$ of the FPS that has been introduced to the arm. The nulling process is automatically achieved by the ferrite servo-current driver (FSD) that follows the phase-sensitive detector. The ferrite servo-current driver has a feedback control loop as shown in Fig. 1. Any small phase shift deviation from the initial quadrature setup induces a nonzero PSD output voltage that provides an input current to the driver. This input current changes (increases or decreases) until the phase-sensitive detector output again becomes zero with the help of servo control of the FSD. When this happens from the current-phase shift characteristic of the FPS unit used, the value of $\Delta\phi_{FPS}$ and, in turn, $\Delta\phi_p$ is found. The $\Delta\phi_p$ is related to the plasma density as $\Delta\phi_p = \alpha \int dy\, n(y)$, where α represents the interferometer operating parameter,[2] related to ω, and $\int dy\, n(y)$ is the electron line density along the beam path length y.

IV. PERFORMANCE

The overall system response time to a step phase shift change (0 to $\pi/2$) has been measured, and the result is given in Fig. 2 by the lower trace. The upper trace represents the step phase shift change of the second FPS that was inserted into the reference arm and energized with a pulse generator. The amplitude of the second trace corresponds to a $\pi/2$ phase shift, and its rise time is about 100 μs. The amplitude difference between the traces is due to not having a perfectly matching pair of FPSs for the operating frequency used. The rise time of the system can be improved by choosing a higher modulation frequency and by making the PSD low-pass filter an active one that operates with a larger bandwidth.

V. CONCLUSION

The fast interferometer described here can successfully be utilized on other plasma devices as long as their densities have few fringes at 70 GHz, like the EBT plasma. At these low densities (~few 10^{12} cm^{-3}), a minimum number of FPSs are used in conjunction with the circulator. The low-density limitation of the system is due only to the insertion losses of the CIR-FPS combination (~6–7 dB at V-band) that affects the output power of the microwave source to be used.

A number of advantages of this interferometer can be summarized as follows:

1. The system is simple and inexpensive.
2. The time evolution of the density can be observed and measured "instantaneously."
3. The absolute value of the phase shift measured is readily obtained from the ferrite control current.
4. In situ calibration is carried out easily with a DRPS, which is inserted into the reference arm that simulates the plasma.
5. The maximum measurable phase shift, or dynamic range, of the system can easily be extended by using a number of FPSs in series.

This system is presently part of the horizontally scanning interferometer[5] on EBT so that it is possible to measure the time evolution of the density profile n(x,t) during the pulsed operation of the device.

ACKNOWLEDGMENTS

The help of R. E. Wintenberg for the realization of the interferometer and the valuable suggestions of R. J. Colchin are gratefully acknowledged. This research was sponsored by the Office of Fusion Energy, U. S. Department of Energy, under Contract No. DE-AC05-84OR21400 with Martin Marietta Energy Systems, Inc.

REFERENCES

[1]R. J. Colchin, T. Uckan, F. W. Baity, L. A. Berry, F. M. Bieniosek, L. Bighel, W. A. Davis, E. Dullni, H. O. Eason, J. C. Glowienka, G. A. Hallock, G. R. Haste, D. L. Hillis, A. Komori, T. L. Owens, R. K. Richards, L. Solensten, T. L. White, and J. B. Wilgen, Plasma Phys. 25, 597 (1983).

[2]M. A. Heald and C. B. Wharton, *Plasma Diagnostics with Microwaves* (Robert E. Krieger Pub. Co., 1978), Chapter 6, p. 200.

[3]T. D. Dyson, IEEE Trans. Microwave Theory Tech., MTT-14, 410 (1966).

[4]F. M. Gardner, *Phaselock Techniques* (John Wiley and Sons, Inc., New York, London, and Sydney, 1966), p. 58.

[5]T. Uckan, Rev. Sci. Instrum. 54, 1420 (1983).

FIGURE CAPTIONS

Fig. 1. Schematic of the direct reading 4-mm fast microwave interferometer. I – isolator; PIN – pin diode; DC – directional coupler; ATT – attenuator; DRPS – calibrated direct reading phase shifter; CIR – circulator; FPS – ferrite phase shifter; PS – remote control phase shifter; H – standard gain horn; BM – balanced mixer; PRE-AMP – selective preamplifier; DIFF – tuned (50-kHz) differential amplifier; PSD – phase-sensitive detector; FSD – ferrite servo-current driver; MOD – 50-kHz modulator.

Fig. 2. The time response of the fast interferometer (~100 μs) to 0– π/2 phase shift change.

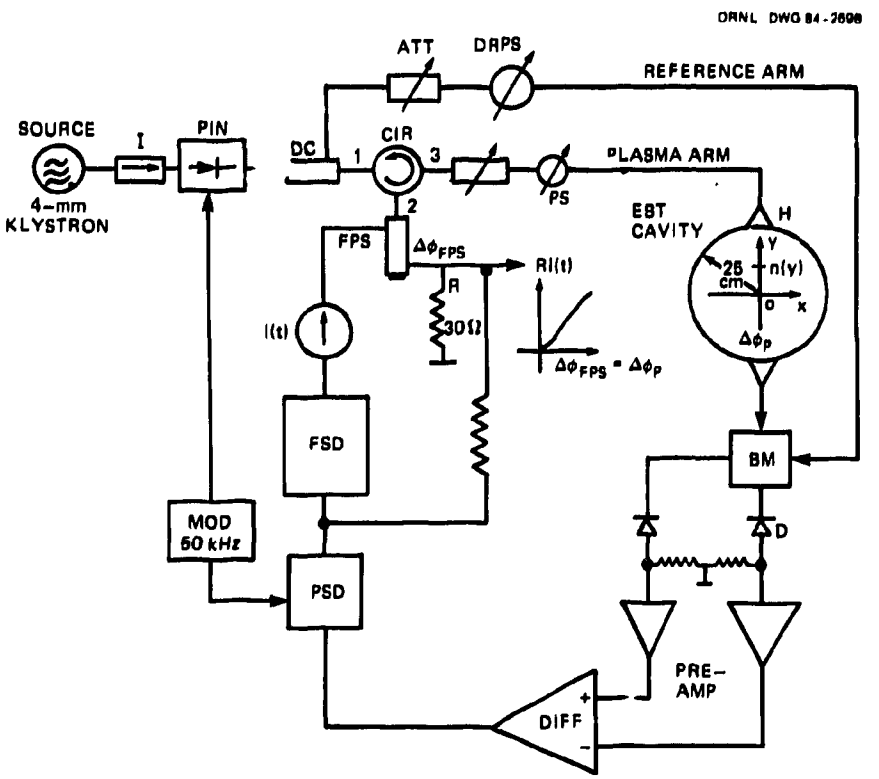

Fig. 1. Schematic of the direct reading 4-mm fast microwave interferometer. I - isolator; PIN - pin diode; DC - directional coupler; ATT - attenuator; DRPS - calibrated direct reading phase shifter; CIR - circulator; FPS - ferrite phase shifter; PS - remote control phase shifter; H - standard gain horn; BM - balanced mixer; PRE-AMP - selective preamplifier; DIFF - tuned (50-kHz) differential amplifier; PSD - phase-sensitive detector; FSD - ferrite servo-current driver; MOD - 50-kHz modulator.

ORNL-PHOTO 0016-83 FED

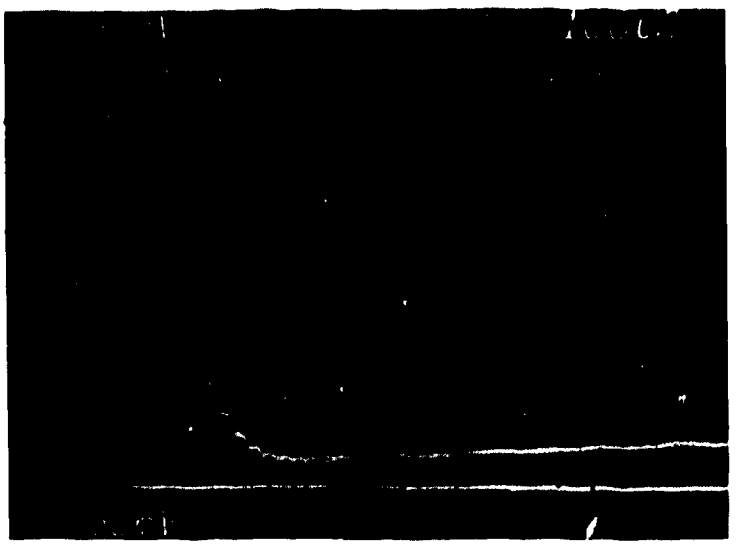

Fig. 2. The time response of the fast interferometer (~100 μs) to 0– π/2 phase shift change.

ABSTRACT

A simple and inexpensive 4-mm direct reading fast (rise time ~ 100 μs) microwave interferometer is described. The system is particularly useful for density measurements on the ELMO Bumpy Torus (EBT) during pulsed operation.

ORNL/TM-9240
Dist. Category UC-20 f,g

INTERNAL DISTRIBUTION

1. F. W. Baity
2. D. R. Baumgardner
3. L. A. Berry
4. T. S. Bigelow
5. N. B. Bryson
6. R. J. Colchin
7. W. A. Davis
8. A. M. El-Nadi
9. J. C. Glowienka
10. G. R. Haste
11. D. L. Hillis
12. S. Hiroe
13. H. D. Kimrey
14. L. W. Owen
15. D. A. Rasmussen
16. J. Sheffield
17. D. A. Spong
18. D. W. Swain
19. N. A. Uckan
20-24. T. Uckan
25. J. B. Wilgen
26-27. Laboratory Records Department
28. Laboratory Records, ORNL-RC
29. Central Research Library
30. Fusion Energy Division Publications Office
31. Fusion Energy Division Library
32. Document Reference Section
33. ORNL Patent Office

EXTERNAL DISTRIBUTION

34. W. B. Ard, McDonnell Douglas Astronautics Company, Bldg. 278, P. O. Box 516, St. Louis, MO 63166
35. J. Barter, Lawrence Livermore National Laboratory, University of California, P. O. Box 808, Livermore, CA 94550
36. H. L. Berk, Institute for Fusion Studies, University of Texas at Austin, RLM 11.218, Austin, TX 78712
37. Bibliothek, Centre de Recherches en Physique des Plasmas, 21 Avenue des Bains, 1007 Lausanne, Switzerland
38. Bibliothek, Institut fur Plasmaphysik, D-8046 Garching bei Munchen, Federal Republic of Germany
39. Bibliothek, Institut fur Plasmaphysik, KFA, Postfach 1913, D-5170, Federal Republic of Germany
40. Bibliotheque, Service du Confinement des Plasmas, CEA, B.P. No. 6, 92 Fontenay-aux-Roses (Seine), France
41. F. M. Bieniosek, McDonnell Douglas Astronautics Company, Bldg. 278, P. O. Box 516, St. Louis, MO 63166
42. J. D. Callen, Department of Nuclear Engineering, University of Wisconsin, Madison, WI 53706
43. R. W. Conn, Department of Chemical, Nuclear and Thermal Engineering, University of California, Los Angeles, CA 90024
44. R. A. Dandl, Applied Microwave Plasma Concepts, 2210 Encinitas Blvd., Suite P, Encinitas, CA 92024
45. N. A. Davies, U. S. Department of Energy, Office of Fusion Energy, Office of Energy Research, Mail Station G-256, Washington, DC 20545
46. S. O. Dean, Director, Fusion Energy Development, Science Applications, Inc., 2 Professional Drive, Suite 249, Gaithersburg, MD 20760

47. Documentation S.I.G.N., Department de la Physique du Plasma et de la Fusion Controllee, Centre d'Etudes Nucleaires, B.P. 85 Centre de Tri, 38041 Cedex, Grenoble, France
48. G. A. Eliseev, I. V. Kurchatov Institute of Atomic Energy, P. O. Box 3402, 123182 Moscow, U.S.S.R.
49. A. J. Favale, Grumman Aerospace Corporation, South Oyster Bay Road, P. O. Box 31, Bethpage, NY 11714
50. H. K. Forsen, Bechtel Group, Inc., Research Engineering, P. O. Box 3965, San Francisco, CA 94105
51. M. Fujiwara, Institute of Plasma Physics, Nagoya University, Nagoya 464, Japan
52. T. V. George, Office of Fusion Energy, Office of Energy Research, Mail Station G-256, Department of Energy, Washington, DC 20545
53. G. G. Gibson, Westinghouse Electric Corp., Fusion Power Systems, Dept. C, P. O. Box 10864, Pittsburgh, PA 15236
54. V. A. Glukhikh, Scientific-Research Institute of Electro-Physical Apparatus, 188631 Leningrad, U.S.S.R.
55. R. W. Gould, Department of Applied Physics, California Institute of Technology, Pasadena, CA 92024
56. R. L. Hickok, Rensselaer Polytechnic Institute, ESE Department, Engineering Building, Troy, NY 12181
57. H. Ikegami, Institute of Plasma Physics, Nagoya Univ., Nagoya 464, Japan
58. H. R. Jory, Varian Associates, 611 Hansen Way, Palo Alto, CA 94303
59. N. A. Krall, Jaycor, 11011 Torreyana Rd., P. O. Box 85154, San Diego, CA 92138
60. K. Krause, Lawrence Livermore National Laboratory, P. O. Box 808, Livermore, CA 94550
61. J. Lassoon, TRW Defense and Space Systems, 1 Space Park, Bldg. R-1, Redondo Beach, CA 92078
62. N. H. Lazar, TRW Defense and Space Systems, 1 Space Park, Bldg. R-1, Redondo Beach, CA 92078
63. Library, Culham Laboratory, UKAEA, Abingdon, Oxfordshire, OX14-3DB, England
64. Library, FOM Institute voor Plasma-Fysica, Rijnhuizen, Jutphaas, Netherlands
65. Library, Institute of Physics, Academia Sinica, Peking, Peoples Republic of China
66. Library, Institute for Plasma Physics, Nagoya University, Nagoya 464, Japan
67. Library, International Centre for Theoretical Physics, Trieste, Italy
68. Library, Laboratoria Gas Ionizzati, Frascati, Italy
69. Library, Plasma Physics Laboratory, Kyoto University, Gokasho Uji, Kyoto, Japan
70. D. G. McAlees, Exxon Nuclear Company, Inc., 777 106th Avenue, NE, Bellevue, WA 98009
71. J. B. McBride, Science Applications, Inc., 1200 Prospect Street, P. O. Box 2351, La Jolla, CA 92037
72. Plasma Research Laboratory, Australian National University, P. O. Box 4, Canberra ACT, 2000, Australia
73. P. J. Reardon, Princeton Plasma Physics Laboratory, P. O. Box 451, Princeton, NJ 08544
74. F. L. Ribe, College of Engineering, AERL Building, FL-10, University of Washington, Seattle, WA 98195
75. D. D. Ryutov, Institute of Nuclear Physics, Siberian Branch of the Academy of Sciences of the U.S.S.R., Sovetskaya St. 5, 630090 Novosibirsk, U.S.S.R.
76. I. Spighel, Lebedev Physical Institute, Leninsky Prospect 53, 117924 Moscow, U.S.S.R.

77. Thermonuclear Library, Japan Atomic Energy Research Institute, Naka, Ibaraki, Japan
78. V. T. Tolok, Kharkov Physical-Technical Institute, Academical St. 1, 310108, Kharkov, U.S.S.R
79. J. M. Turner, Office of Fusion Energy, Office of Energy Research, Mail Station G-256, Department of Energy, Washington, DC 20545
80. R. Varma, Physical Research Laboratory, Navrangpura, Ahmedabad, India
81. H. Weitzner, New York University, Courant Institute of Mathematical Sciences, 251 Mercer Street, New York, NY 10012.
82. Office of the Assistant Manager for Energy Research and Development, Department of Energy, Oak Ridge Operations, P. O. Box E, Oak Ridge, TN 37830

83-290. Given distribution as shown in TID-4500, Magnetic Fusion Energy (Distribution Category UC-20 f,g: Theoretical Plasma Physics and Experimental Plasma Physics)

☆U.S. GOVERNMENT PRINTING OFFICE: 1984-544-045/4192