UCRL-93272

UCRL--93272

DE86 005618

Glovebox Enclosed D. C. Plasma Source for the Determination of Metals in Plutonium

William F. Morris

For Presentation at the ASTM Seminar on the Use and Development of Enclosed Plasma Spectroscopic Sources for the Analysis of Toxic and Radioactive Materials, January 15, 1986, New Orleans, LA

MASTER

DISTRIBUTION OF THIS DOCUMENT IS UNLIMITED

ABSTRACT

The direct current plasma source of a Beckman Spectraspan IIIB emission spectrometer was enclosed in a glovebox at Lawrence Livermore National Laboratory in December 1982. Since that time, the system has been used for the routine determination of alloy and impurity metals in plutonium. This paper presents the systematic steps involved in developing the glovebox and gives information regarding performance of the plasma in the glovebox and the effectiveness of containment of plutonium.

KEYWORDS

Plasma, direct current, spectrometry, plutonium, radioactivity, glovebox, enclosure, design, analysis

INTRODUCTION

In December of 1982 the Plutonium Analytical Chemistry Laboratory of Lawrence Livermore National Laboratory (LLNL) placed in operation a glovebox enclosed Direct Current Plasma (DCP) source for the determination of metals in plutonium solutions. The DCP source constitutes an integral part of a Beckman Instruments (formerly Spectrametrics) Spectraspan IIIB emission spectrometer. Because of time constraints and immediate programmatic needs, the design of the glovebox enclosure was carried out in an informal way that did not produce detailed engineering drawings prior to fabrication. We intended from the outset of the project to work directly with the facility engineers, quality assurance staff and with fabrication personnel to expidite the project. We provided them with detailed information about the components and operations involved in DCP spectrometry and subsequently directed the design and were involved frequently in the fabrication and testing tasks. In spite of the decision to forego formal drawings we believe that our approach was systematic and that appropriate steps were taken to ensure a good design and produce an effective prototype enclosure.

We are happy to present details of the project at this seminar sponsored by ASTM Subcommittee C26.05. Participation in this seminar has provided an incentive to evaluate the project and document the steps in a format that we hope will contribute to the subcommittee's work in developing guidelines.

PROJECT TASKS

The project was carried out systematically by bringing together the information needed to define what the enclosure was intended to do, the requirements needed for the design and the resources to fabricate it. The project can be divided into five clearly defined tasks: 1) project definition and requirements, 2) preliminary design concepts, 3) prototype glovebox design, 4) prototype glovebox installation, and 5) performance of the prototype.

PROJECT DEFINITION AND REQUIREMENTS

Before any design can be conceived it is essential to define what is to be accomplished and to compile the information needed to delineate the characteristics of the materials and operations involved. From this information a list of requirements can be developed. Application of these steps to development of the DCP source enclosure is described in the following sections.

Project Definition

The primary purpose of this step is to insure a clear statement of project objectives and an understanding of them amoung all parties involved in the project, including the analysts using the DCP spectrometer, the plutonium facility engineers, the facility quality assurance staff, and fabrication shop personnel. Five objectives were defined:

1) to design and build a prototype enclosure allowing safe and uncompromised operation of the DCP source for the analysis of samples containing plutonium,

2) to build a unit meeting LLNL plutonium facility engineering, safety, and quality assurance standards,

3) to test the effectiveness of the unit before use with plutonium solutions and make changes where needed,

4) to utilize the unit to meet immediate programmatic needs, and

5) to use the test an operation experience for future installations.

Description of DCP Source Components and Operations

A systematic description of DCP source components and operations for the analysis of plutonium solutions can be divided into eight categories: 1) Configuration and operating parameters of the DCP electrode - sample nebulizer unit, 2) utilities specifications, 3) characteristics of the materials introduced and exhausted from the plasma, 4) plasma operation and computer interaction processes, 5) operations associated with changing and alignment of the electrodes, 6) routine and unusual maintenance operations, 7) quantities of standards, samples and other materials utilized in the operations, and 8) waste disposal. Detailed discriptions of each category are given in Appendix I.

Analysis of Requirements

In developing the requirements needed for the design process, the basic approach was to analyze the DCP component and process descriptive information and references and to compile a list of requirements. The details that emerged from this procedure are given in Appendix II.

PRELIMINARY DESIGN CONCEPTS

In analyzing the DCP source enclosure requirements we determined that the configuration must fit two major constraints: 1) limitation of the space available between the source focusing lens and the entrance slit of the spectrometer, and 2) the fixed geometry of the phototube housing relative to the exit slit detector assembly. It was apparent that modifications were necessary; however they could be minimized if the enclosure were designed to rest at least partially on the optical bench of the spectrometer to take advantage of the existing optics for illuminating the spectrometer entrance slit. It was deemed prudent, therefore, to minimize the glovebox size and weight to avoid possible distortion of the optical bench of the spectrometer. These design considerations mandated modification of two spectrometer components: 1) removal of part of the optical bench and 2) relocation of the photomultiplier voltage controls and the optical cassette access door on the phototube housing.

These constraints, projected modifications, and other space and operational requirements were used to design several enclosure concepts that were tested using cardboard mock-ups. A variety of configuration and operational aspects were tested by simulating tasks in the mock-ups. This test-of-concepts procedure provided basic information for the prototype design including: size and shape of the enclosure, placement of gloveports and bagout port, and range of glove extension.

PROTOTYPE DESIGN

The prototype design was intended to produce a fully functional glovebox in which the DCP source could be used for the analysis of a variety of plutonium sample solutions. Furthermore it was intended that the system be placed in service for an extended length of time sufficient to meet immediate programmatic needs and undergo long-term testing. The basic design of the enclosure is shown in figure 1. It includes air intake and exhaust lines and a magnehelic gauge for measuring differential pressure indicative of ventilation within the box. Ventilation is controlled by a movable aperture where the air enters the enclosure and a butterfly valve on the exhaust line. The design also includes high efficiency particulate air filters (not shown) on both the air intake and exhaust lines.

The area designated by 5 in figure 1 shows the portion of the box configured to the optical bench. In order to accommodate this arrangement the design called for removal of part of the spectrometer "U" shaped optical bench. Accordingly, the peristaltic pump, normally attached to one leg of the "U" was redesigned to mount on an independent, movable support resting on the floor of the enclosure as shown in figure 2.

The prototype design also called for inclusion of the original DCP source exhaust housing and chimney as shown in figure 2. This design retains the original exhaust flow characteristics and the electrical interlock and ultraviolet radiation safety features of the original housing shield.

PROTOTYPE GLOVEBOX IMPLEMENTATION

Figure 3 shows the overall arrangement of the glovebox enclosure, filtered air intake and exhaust system, mechanical supports, and the spectrometer and computer components. The glovebox is equipped with 8 inch diameter gloveports on 13 inch centers. The gloves were specially ordered having gauntlets 32 inches long by 15 mil thickness with a size 8 1/2 hand of 8 mil thickness to provide maximum dexterity. A bagin-bagout port is located on the right side of the enclosure. Other visible features are the air flow controls, the magnehelic probe and a sliding pocket door designed for placing samples and other items in the enclosure. No items can be removed from the glovebox through the pocket door.

The interior arrangement of the DCP source housing and chimney, the peristaltic pump, and various sample and waste containers are shown in figure 4. No lighting fixtures are required to illuminate the enclosure. To maximize visibility the front window is sloped and then bent horizontally at the top of the glovebox to avoid use of a strut that would impede visibity of the electrode-nebulizer system.

In figure 5 the exhaust housing and chimney have been removed exposing the arrangement of the peristaltic pump, the electrode system, the source lens, and the silica window on the front wall of the enclosure. The peristaltic pump unit can be moved easily allowing full access to the electrode-nebulizer assembly during maintenance operations. The glovebox is secured to the optical bench at the post which supports the electrode - nebulizer assembly. This point located just to the left of the three electrodes is the only point of penetration into the glovebox. A rubber gasket between the bottom of the box and the surface of the optical bench provides the seal.

Details of the filtered air inlet and exhaust system are shown in figure 6. Optimum ventilation of the enclosure and exhaust of the DCP source housing are maintained at a negative pressure of 1.5 inches of water. High efficiency particulate air filters in the rectangular and cylindrical containers are mounted on the air inlet and exhaust lines.

The glovebox enclosure supports are shown in figure 7. They consist of adjustable struts for aligning the enclosure with the spectrometer and mechanical constraints to meet seismic effect criteria. Most of the weight of the enclosure is carried by the adjustable struts.

The utilities manifold, shown in figure 8, is located on the back wall of the glovebox below the phototube housing. The reverse side of the manifold inside the box has the same configuration as the outside allowing distribution of argon, water and electricity to appropriate locations on the electrode-nebulizer assembly.

PERFORMANCE OF THE PROTOTYPE GLOVEBOX

After being placed in operation in December of 1982 the glovebox enclosed DCP source has been used for the analysis of a wide variety of plutonium samples and other plutonium-contaminated materials. The performance of the plasma has not been degraded by being enclosed and the glovebox has been very effective in containing radioactivity associated with plutonium. To date several thousand samples and standards have been excited in the plasma with no detected release of radioactivity.

Plutonium Sample Analysis Applications

A summary of analytical applications of the glovebox enclosed DCP source is given in Table 1. These data are comparable to data obtained for similar DCP sources operated outside of an enclosure on non-radioactive samples.

Radioactivity and Thermal Measurements

Radiation measurements have been made at various surface locations on the glovebox, the exhaust piping and the filter housing. Table 2 indicates that the levels are well within acceptable limits. Temperature measurements while the plasma was operating were made on the surface of the glovebox near the exhaust exit and at various locations along the exhaust pipe. The measurements, shown in table 3, indicate that virtually all of the heat associated with the plasma is taken directly out of the enclosure through the exhaust piping.

Ergonomic Features

For the most part the operational features of the glove box are effective. The most common problems are related to compatibility between different operators and the fixed geometry of the enclosure, for example, the height of the gloveports above the floor and the hand size of the gloves. Both problems affect the degree of comfort for the operators and their dexterity while working in the enclosure.

The prototype glovebox is relatively small, limiting work space and storage especially during heavy workload periods. This problem, not unexpected, can be easily overcome by connecting an auxiliary box to the DCP source enclosure.

SUMMARY

Long-term experience at Lawrence Livermore National Laboratory indicates that a DCP source, enclosed in a glovebox, can be operated effectively for the analysis of solutions containing plutonium. Tests conducted over 3 years using a prototype glovebox enclosure show no degradation of plasma performance and full containment of radioactivity associated with plutonium.

The tests demonstrate that a glovebox enclosure provides personal and enviromental protection from the hazards associated with DCP excitation of plutonium and that more permanent installations are wholly feasible.

Acknowledgments

The author wishes to thank W. A. Dallas for his diligent efforts in building the glovebox, to R. L. Krueger for making the design mockups, and to S. K. Fadeff and A. Conover for various analytical applications.

Captions

Figures and Tables

Figure 1.	Prototype design - basic enclosure.
Figure 2.	Prototype design - basic enclosure with exhaust chimney and peristaltic pump in place.
Figure 3.	DCP source glovebox and spectrometer system.
Figure 4.	Interior view of DCP source glovebox with exhaust chimney in place.
Figure 5.	Interior view of DCP source glovebox with exhaust chimney removed.
Figure 6.	Filtered air inlet and exhaust for the DCP source glovebox.
Figure 7.	DCP source glovebox support.
Figure 8.	DCP source glovebox utilities manifold.
Figure 9.	Operation steps for the DCP source and spectrometer system.
Table 1.	Plutonium sample analysis using a glovebox enclosed DCP source.
Table 2.	DCP source glovebox surface radiation measurements.
Table 3.	DCP source glovebox exhaust surface temperature measurements.

APPENDIX I

DESCRIPTION OF D. C. PLASMA SOURCE COMPONENTS AND OPERATIONS

1) Configuration and Operating Parameters of the DCP Electrode System

The DCP is a flowing argon gas stabilized electrical discharge maintained by a continuous direct current arc core. The discharge is shaped like an inverted "Y" resulting from the relative positions of two anodes and the cathode. The following components make up the DCP jet assembly:

- a dual anode, single cathode electrode system,
- an electrode assembly housing with an exhaust chimney and protective shield,
- a power supply for the electrode discharge,
- a cooling water supply to cool the electrode blocks during plasma operation,
- a sample nebulizer and spray chamber for converting the liquid sample to an aerosol,
- a peristaltic pump that transfers the sample to the nebulizer.

The configuration of the DCP electrode housing and its relationship to the other spectrometer modules is shown in figure 1-15 of reference 1. The housing includes a shield that protects the operator from electrical shock and exposure to excessive ultraviolet radiation. More information can be found on pages 4-3 and 4-4 or reference 1. Details of the electrode assembly and nebulizer are shown in figures 1-3 and 2-12 of reference 2.

2) Utilities Specifications

Argon gas, cooling water, and electrical specifications for the DCP unit are given on page 1-15 of reference 2. All are carried in a spiral-wrapped utilities bundle and are distributed to appropriate locations and a manifold on the electrode assembly base plate as shown on figure 2-12 of reference 2.

3) Characteristics of the Materials Introduced and Exhausted from the DCP Source

The glovebox enclosure is intended to contain radioactivity associated with the DCP spectrometric analysis of plutonium and plutonium-contaminated materials. Virtually all of the original plutonium samples will have been processed to remove the bulk of the plutonium *before DCP analysis. Only small* amounts of plutonium and some americium (both < 10 μg/ml) will be present in the DCP sample solutions. Occasional samples will contain up to 100 μg/ml Pu.

Virtually all samples will be contained in approximately 2M HCl and HNO_3 solutions. Occasionally HF will be present in the solutions to a maximum concentration of 0.5M. No organic solutions will be analyzed by DCP spectrometry.

The individual sample and standard solutions will be contained in 60 ml polyethylene bottles and will be pumped into the DCP source nebulizer by means of a peristaltic pump. The uptake rate of the pump is usually 1 ml/min. Less than 20% of the pumped solution is aspirated into the plasma and exhausted with the hot gas exiting the source. The balance of the solution is pumped to a waste container.

4) Plasma Operation and Computer Interaction Processes

The various steps involved in operating the DCP source and spectrometer system are outlined in figure 9. When not using an automatic sampler the operator performs a number of sequential operations related to optimizing the plasma and spectrometer, introducing samples and standards, and typing information into the computer. Details of these operations are given in chapter 4 of reference 1.

5) Replacement and Alignment of the Electrodes

It is necessary to replace the DCP source electrodes daily or more frequently depending upon usage. The procedure is described on pages 4-4 though 4-6 of reference 1.

It is important to have easy access to the anode and cathode assemblies and to exercise caution in handling the electrodes especially the needle shaped tungsten cathode.

6) Routine and Unusual Maintenance Operations

The anode and cathode blocks and the sample orifice should be cleaned daily to prevent corrosion and buildup of salts. Also graphite particles must be removed routinely from the electrode cylinders and the peristaltic pump tubing must be checked frequently and replaced when necessary. Other maintenance tasks include: adjustment of set screws on the electrode blocks, cleaning the nebulizer and the peristaltic pump components, and maintenance of the cooling water quality.

Unusual or corrective maintenance procedures are sometimes necessary. These include: replacement of degraded or defective o-rings in the nebulizer and electrode assemblies, replacement of the graphite sampling tube, and possible installation of new electrode blocks and a new peristalitic pump. Details of all these procedures are found in chapter 6 of reference 1.

7) Quantities of Standards, Samples, and Other Materials Utilized in the Operations

It is expected that as many as 100 individual solutions consisting of calibration and quality control standards and replicate samples will be analyzed in an 8 hour working day. All of the solutions will have been prepared in a separate glovebox and will be transferred to the DCP enclosure. The solutions will usually be contained in 60 ml screw cap polyethylene bottles.

A variety of small tools for use in handling and aligning the electrodes and adjusting structural elements of the electrode assembly must be available along with supplies of electrodes, sleeves, and various cleaning aids.

8) Waste Disposal

The principal waste will consist of excess solution collected from the nebulizer-spray chamber. Unused standard and sample solutions will accumulate and must be disposed of. The volume of liquid waste can amount to 1000 ml per day. Solid wastes will also accumulate including: discarded electrodes and electrode sleeves, contaminated wipes, polyethylene bags from bagin operations and polyethylene bottles from discarded standards and samples.

APPENDIX II

ANALYSIS OF REQUIREMENTS

1) Recommended Standards

In developing the requirements prior to design, certain LLNL standard criteria must be observed. These criteria are described in references 3 and 4. Other useful standards, criteria, and design information are found in references 5 through 8.

2) Requirements Based on Size and Configuration of the Electrode and Nebulizer Assembly and Utilities

Provide an enclosure of sufficient size to house the DCP electrode and nebulizer assembly and source focusing lens. Locate the left wall of the enclosure adjacent to the entrance slit of the spectrometer and provide space between the outside of the left wall and the spectrometer face to allow adjustments of the entrance slit. Terminate the back wall of the enclosure at the photo-multiplier detector module and provide the operator with comfortable arm extension to reach all sides of the electrode-nebulizer assembly. Make the box of sufficient height to enclose the existing DCP source housing and chimney and extend the floor of the box to a convenient level below the electrode-nebulizer assembly to facilitate convenient maintenance and clean up. Also provide space for temporary removal and setting aside of the chimney housing during maintenance operations.

Retain electrical and ultraviolet light emission safety features equivalent to those on the existing DCP electrode housing.

Route all argon gas, water, and electrical lines contained in the utilities bundle into the enclosure. The major length of the bundle should remain outside of the enclosure.

Provide hardware that will allow attachment of the DCP source enclosure to other glovebox modules.

3) Requirements Based on Radioactivity and Chemical Nature of the Samples.

Provide materials of construction sufficient to contain α activity. Added shielding for β and γ activity (expected level < 2 mr/hr) is not required.

Provide 8 inch diameter gloveports located optimally to allow comfortable access to the electrode system and storage areas of the box.

Provide a type 304 stainless steel enclosure shell of at least 0.187 inch thickness.

Provide exhaust that optimizes DCP source operation (minimum flow 2.83 m^3/min.) and removal of heat, corrosive vapors, and DCP source exhaust.

4) Requirements Based on Source Operation, Standardization, Sampling, and Maintenance

Provide optimal enclosure geometry and accessories (gloves, etc) that allow easy and frequent entry and egress especially during plasma ignition and wavelegnth peaking operations.

Provide optimal geometry and accessories that afford dexterity during electrode replacement, alignment, and maintenance tasks.

Provide maximum window area to optimize visibility of the electrode-nebulizer system. Minimize visual obstructions on the front and top surfaces of the enclosure.

Provide an ultraviolet transmitting window on the left surface of the enclosure to transmit the DCP source light out of the box into the spectrometer. The window should be 1 to 2 inches in diameter by 1/16 inch thick and be located in the light path between the source lens and the entrance slit of the spectrometer.

5) Requirements based on Quantities of Samples, Standards and Materials Used in DCP Spectrometry

Provide space to accommodate standards, samples and supplies for one day of work. This will amount to approximately 50 polyethylene bottles of 60 ml capacity.

Provide space (approximately 4 x 6 inches) to store small boxes containing small maintenance tools, spare electrodes, and accessories.

6) Waste Disposal Requirements

Provide space and container (500ml, min.) for collection of excess solution from the DCP-nebulizer unit.

Provide facilities for the removal (at least daily) of both liquid and solid waste.

References

1) "Operators Manual, Spectraspan IIIB Emission Spectrometer," PN1506029A, Spectrametrics, Inc., 1981.

2) "Technical Manual, Spectraspan IIIB Emission Spectrometer," PN486270A, Spectrametrics, Inc., 1981.

3) "Design Safety Standards," Mechanical Engineering Department, M-012, Rev. 5, Lawrence Livermore National Laboratory, 1982.

4) "Work Enclosures for Toxic and Radioactive Materials," Health and Safety Manual, M-010, Supplement 12.03, Lawrence Livermore National Laboratory, 1980.

5) "Quality Assurance Program Requirements for Nuclear Facilities," ANSI/ASME NQA-1-1983 Edition, The American Society of Mechanical Engineers, 1983.

6) "Nuclear Air Cleaning Handbook, Design, Construction, and Testing of High-efficiency Air Cleaning Systems for Nuclear Application," ERDA 76-21, Oak Ridge National Laboratory, 1976.

7) "Design Criteria for Plutonium Gloveboxes," C852-81, American Society for Testing and Materials, 1981.

8) "Safe Handling of Plutonium," Safety Series No. 39, International Atomic Energy Agency, 1974.

Table 1 - Plutonium sample analysis using a glovebox enclosed DCP source.

Element	Concentration Range[a] in percent	Coefficient of Variation[b] in percent
Am	.02 - .08	1.5
Fe	.05 - .15	2.3
Ga	.10 - 1.5	2.0
Np	.0005 - .005	2.8
Si	.03 - .07	2.5
Ta	.002 - .02	4.0
Zr	.10 - .5	4.5
Rare Earths	.10 - .20	3.5
Trace Elements[c]	.003 - .03	8.6

[a] Percent by weight in Pu
Elements present in Pu at concentrations greater than 0.1% are determined in dilute Pu solutions usually 40 $^{\mu g}$ Pu/ml.
Elements Present in Pu at concentrations less than 0.1% are usually separated from Pu by ion exchange chemistry prior to DCP spectrometry.

[b] 95% Confidence level

[c] Trace elements are: Al, B, Ca, Cr, Cu, Fe, Mg, Mn, Mo, Ni, Pb, Si, Sn, Ti, V, and Zn.

Table 2 - DCP source glovebox surface radiation measurements.

Location [a]	Gamma and X-ray Radiation Measurements, mr/hr[b]
Front Surface between glove parts	0.1
Inside glove hand extended into the center of glovebox	0.2
Underside of glovebox	0.1
Top surface of glovebox adjacent to exhaust opening	0.1
Below first bend of exhaust pipe	0.1
Midpoint of horizontal portion of exhaust pipe	0.1
Below butterfly valve	0.1
Surface of exhaust HEPA filter container	0.6

[a] Refer to figure 3 for locations.

[b] Radiation measurements taken with Victoreen model 471 RF and Eberline model 530 survey meters.

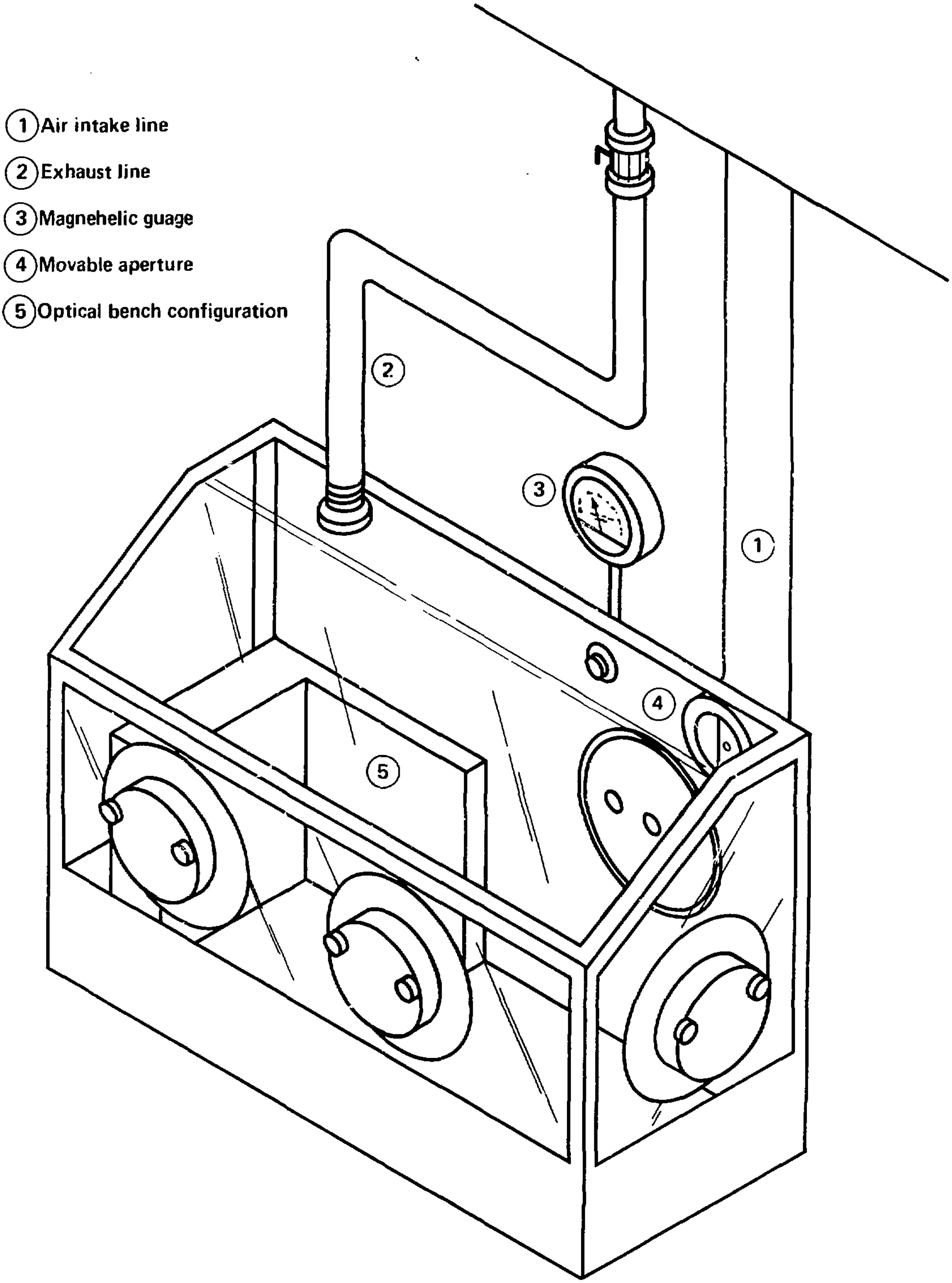

Figure 1. Prototype design - basic enclosure.

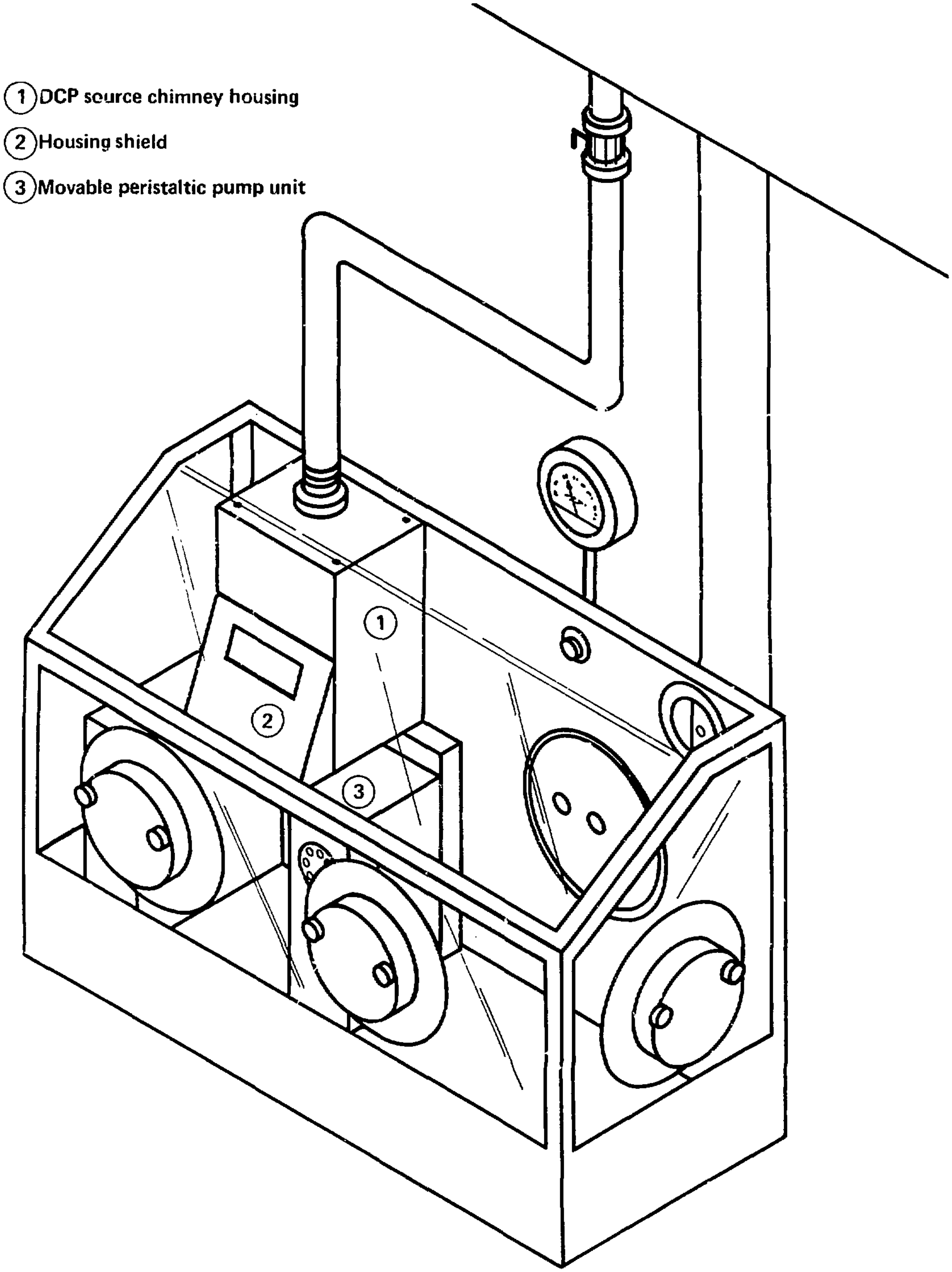

Figure 2. Prototype design - basic enclosure with exhaust chimney and peristaltic pump in place.

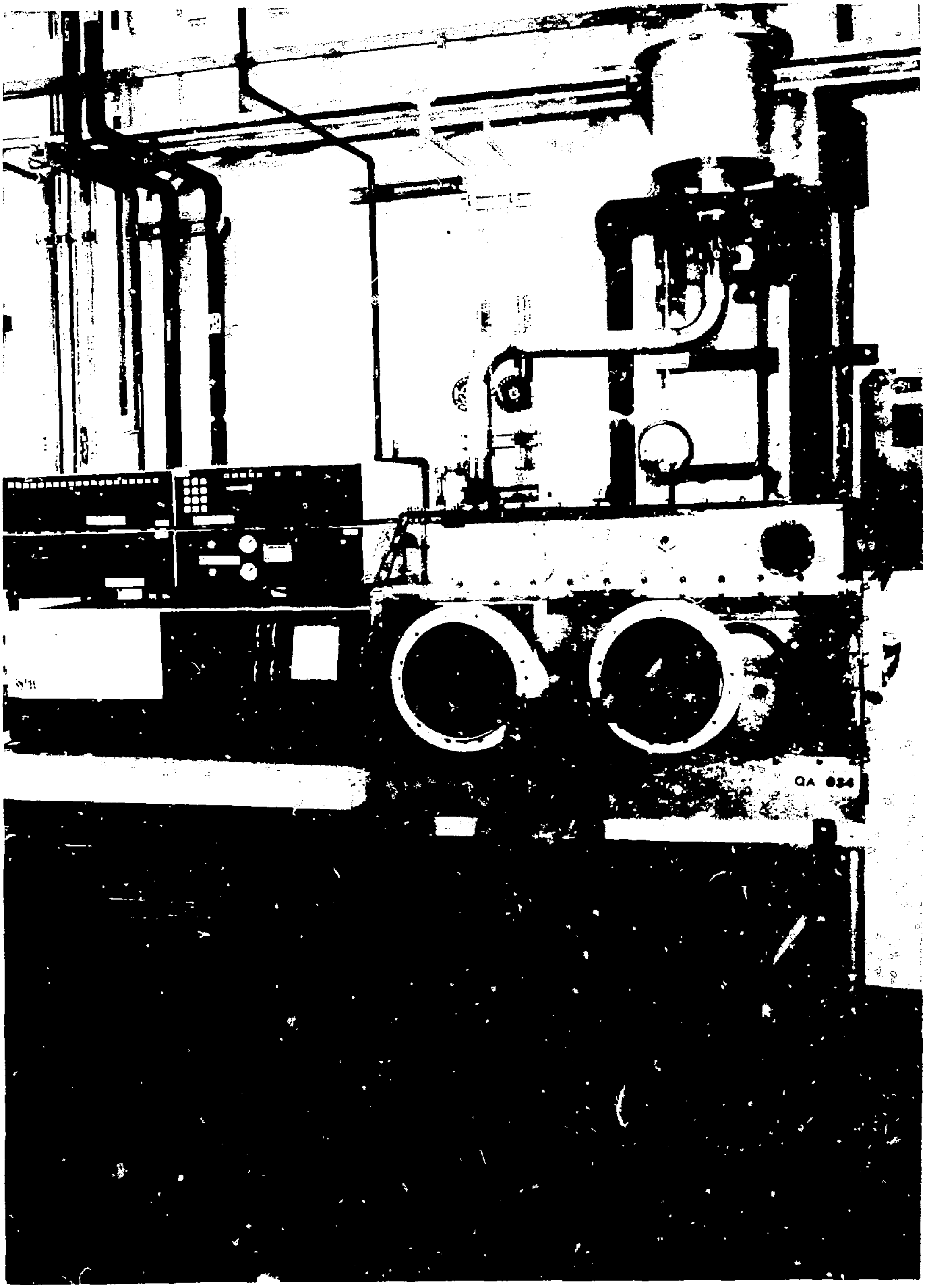

Figure 3. DCP source glovebox and spectrometer system.

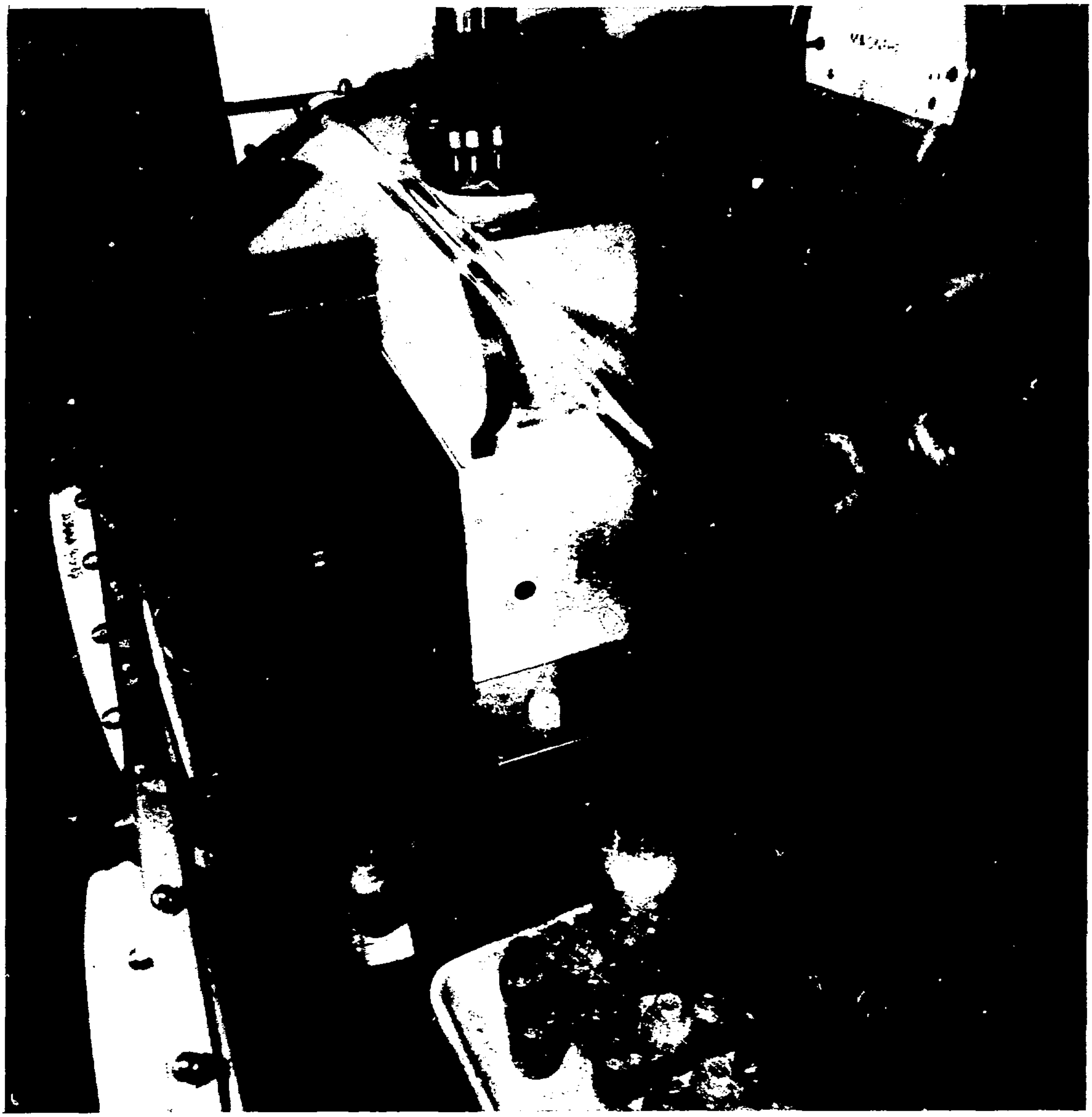

Figure 4. Interior view of DCP source glovebox with exhaust chimney in place.

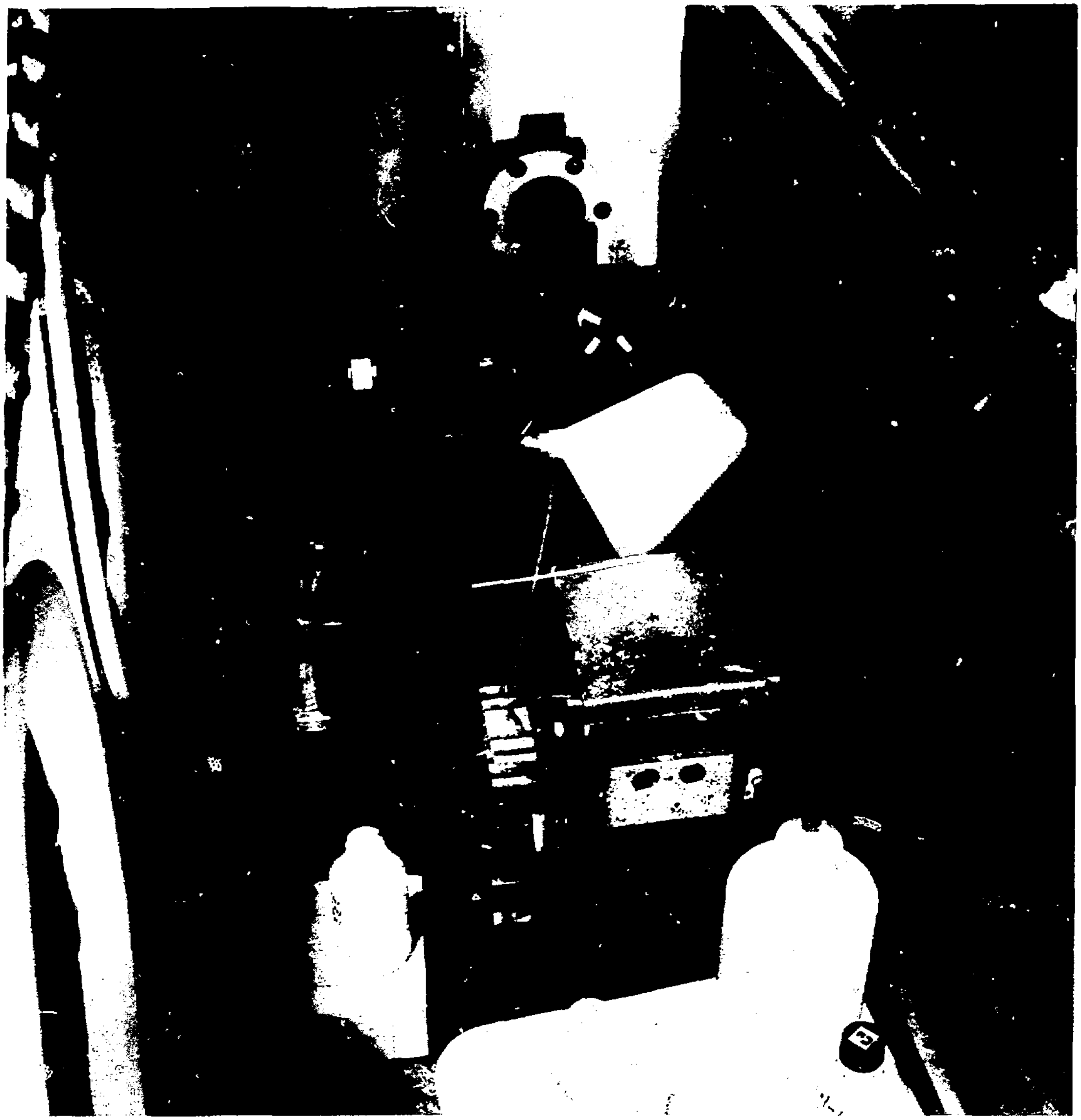

Figure 5. Interior view of DCP source glovebox with exhaust chimney removed.

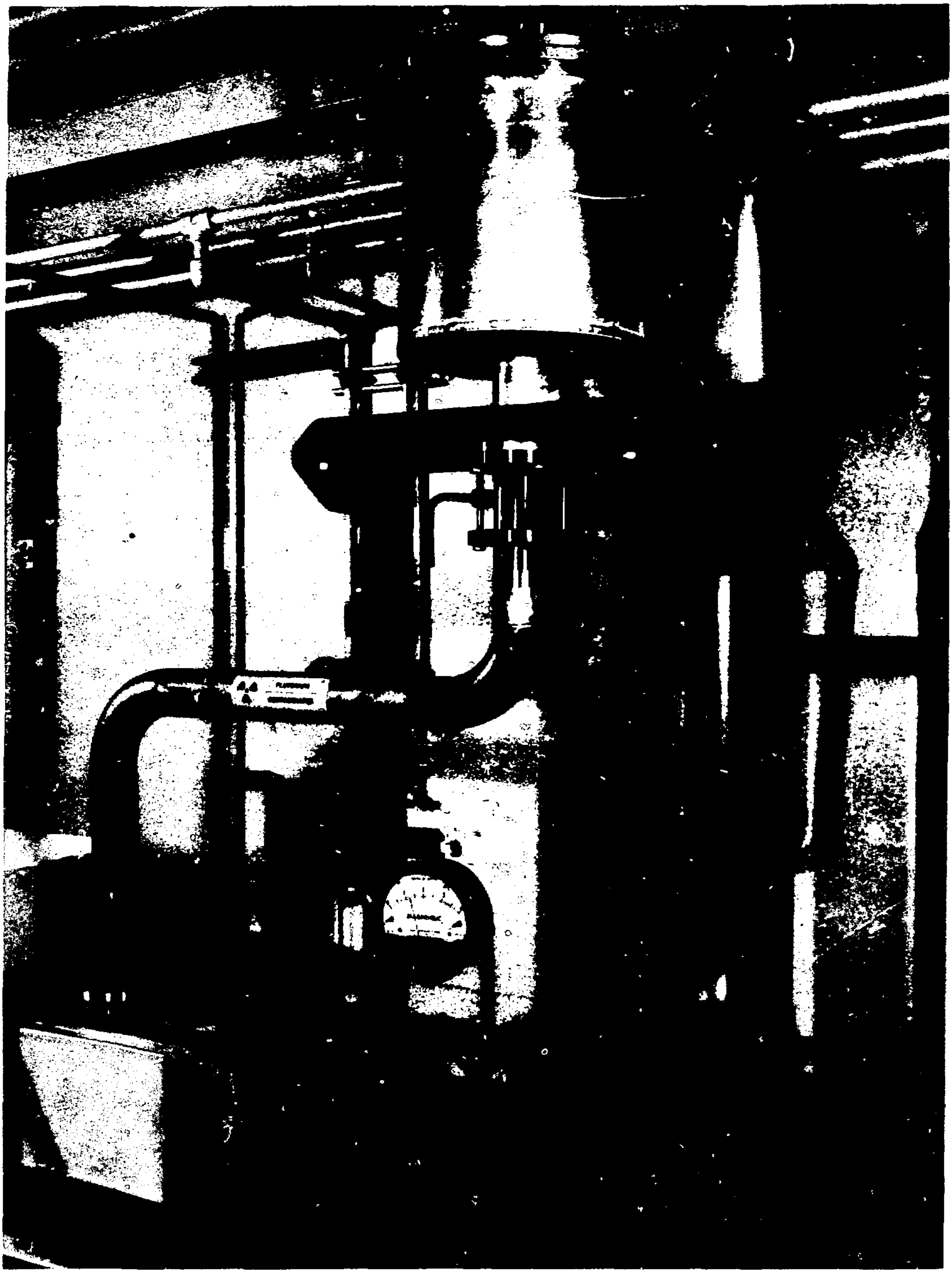

Figure 6.   Filtered air inlet and exhaust for the DCP source glovebox.

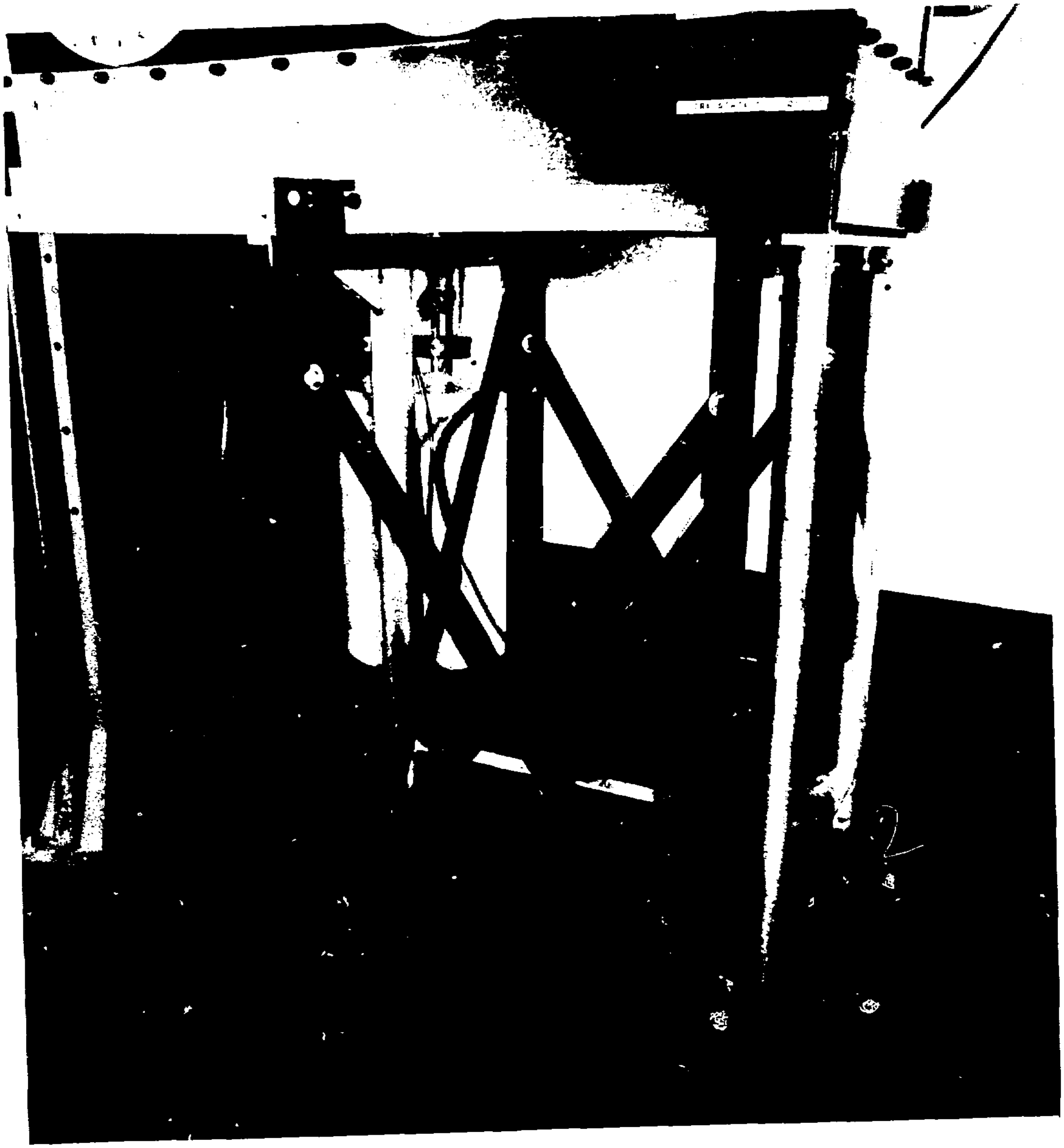

Figure 7. DCP source glovebox support.

Figure 8.   DCP source glovebox utilities manifold.

Table 3 - DCP source glovebox exhaust surface temperature measurements.

Location [a]	Temperature, °c
Top surface of glovebox adjacent to exhaust opening	24
Below first bend of exhaust pipe	40
Midpoint of horizontal portion of exhaust pipe	46
Below butterfly valve	43

[a] Refer to figure 6 for locations.

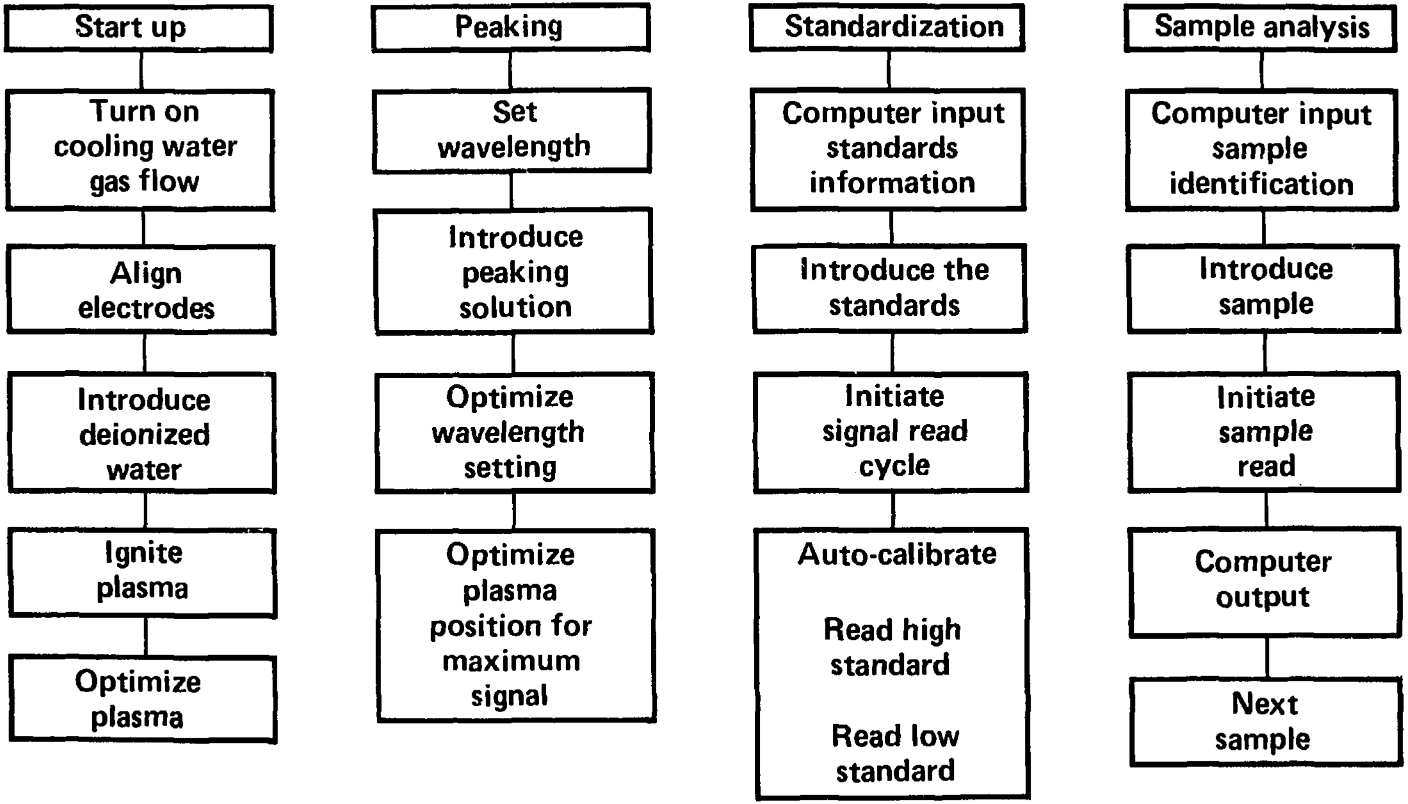

Figure 9. Operation steps for the DCP source and spectrometer system.